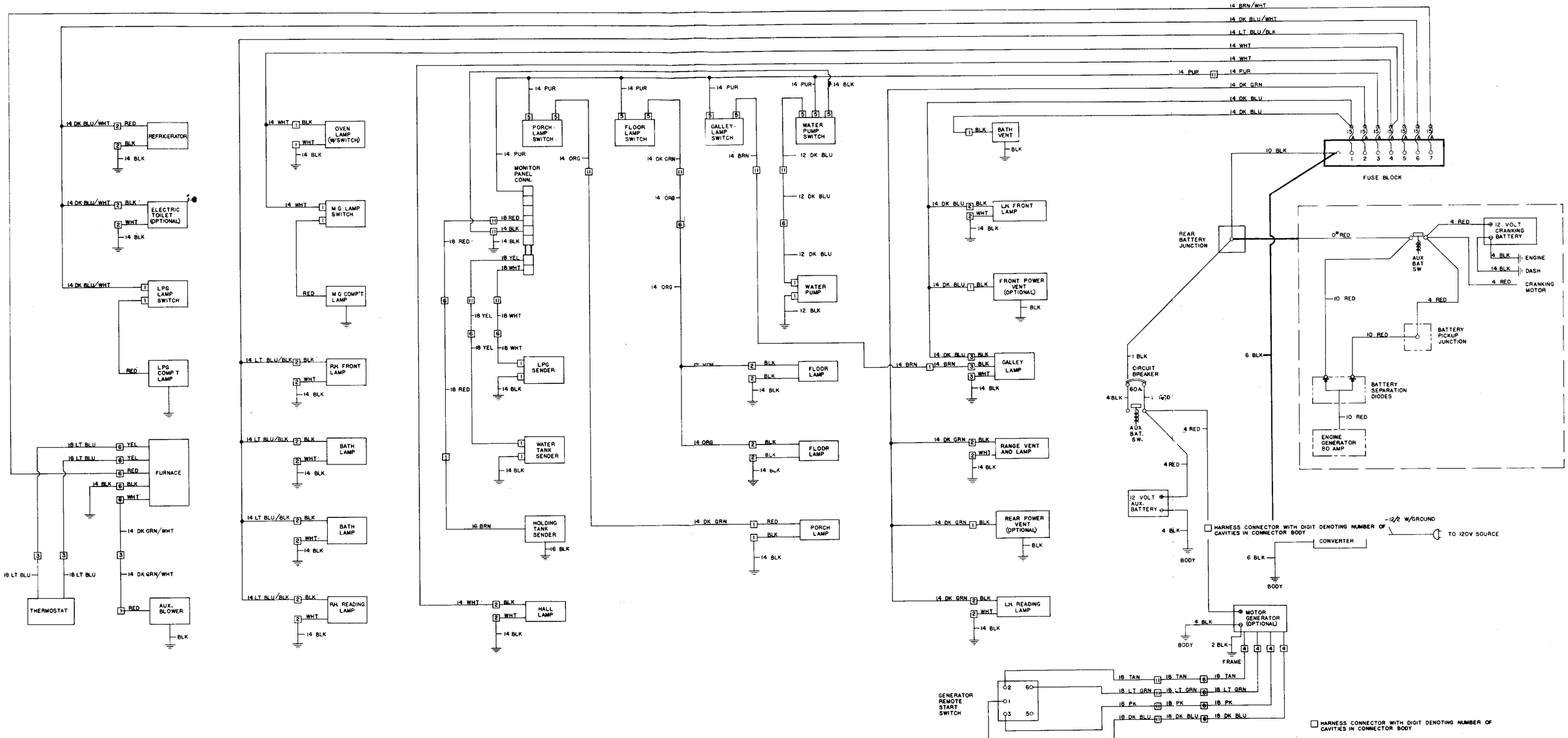1975 GMC MOTORHOME LIVING AREA 12-VOLT DC ELECTRICAL SYSTEM
(PRIOR TO TZE165V100893)
NOVEMBER 1975