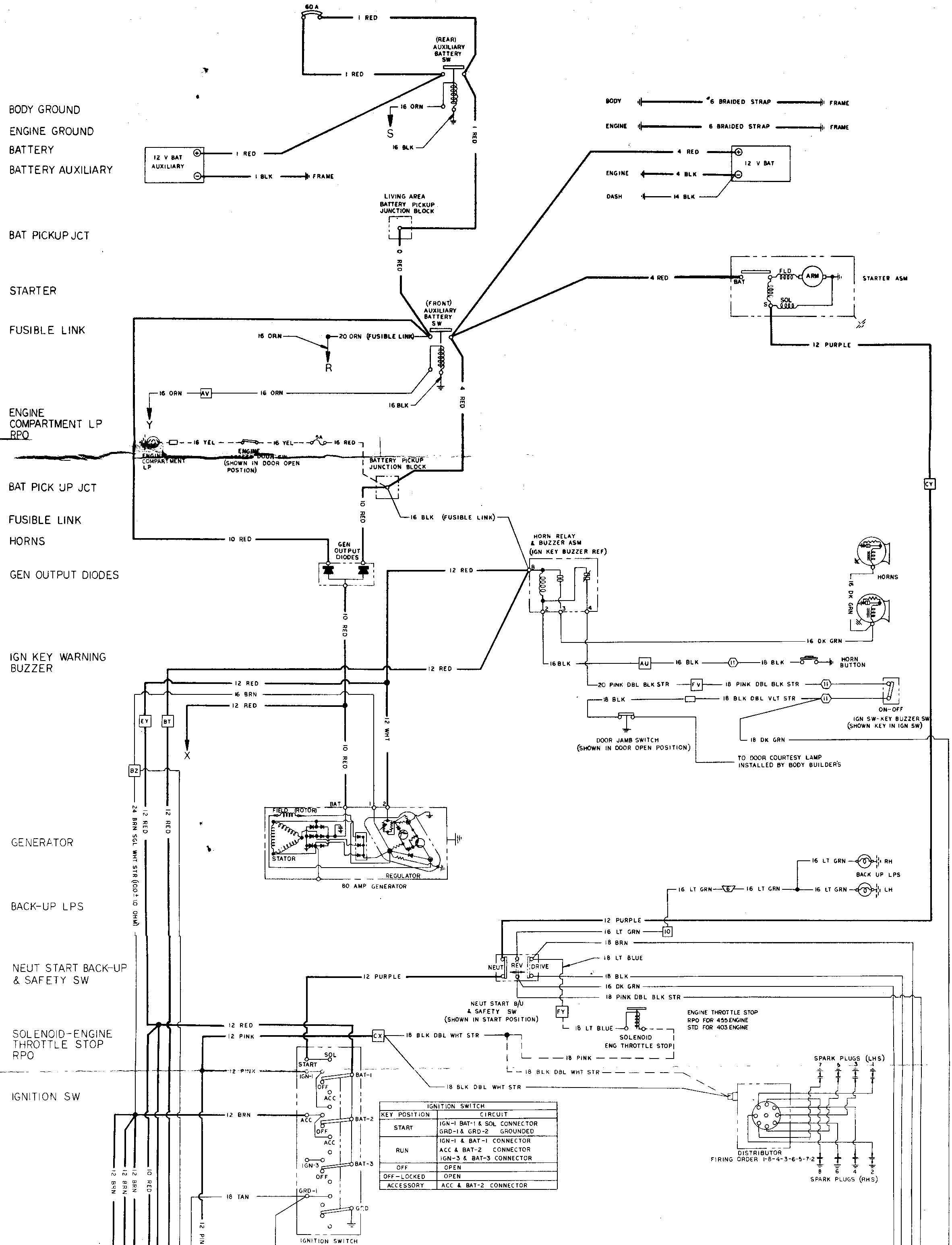
BODY GROUND
ENGINE GROUND
BATTERY
BATTERY AUXILIARY
BAT PICKUP JCT
STARTER
FUSIBLE LINK
ENGINE COMPARTMENT LP RPO
BAT PICK UP JCT
FUSIBLE LINK
HORNS
GEN OUTPUT DIODES
IGN KEY WARNING BUZZER
GENERATOR
BACK-UP LPS
NEUT START BACK-UP & SAFETY SW
SOLENOID-ENGINE THROTTLE STOP RPO
IGNITION SW
60 A
1 RED
(REAR) AUXILIARY BATTERY SW
1 RED
16 ORN
S
16 BLK
1 RED
12 V BAT AUXILIARY
1 RED
1 BLK
FRAME
LIVING AREA BATTERY PICKUP JUNCTION BLOCK
0 RED
BODY
6 BRAIDED STRAP
FRAME
ENGINE
6 BRAIDED STRAP
FRAME
4 RED
12 V BAT
ENGINE
4 BLK
DASH
14 BLK
4 RED
STARTER ASM
BAT
FLD
ARM
SOL
S
12 PURPLE
(FRONT) AUXILIARY BATTERY SW
16 ORN
20 ORN (FUSIBLE LINK)
R
16 ORN
AV
16 ORN
16 BLK
4 RED
Y
16 YEL
16 YEL
5A
16 RED
ENGINE COMPARTMENT LP
ENGINE DOOR SW (SHOWN IN DOOR OPEN POSITION)
BATTERY PICKUP JUNCTION BLOCK
10 RED
16 BLK (FUSIBLE LINK)
CY
10 RED
GEN OUTPUT DIODES
12 RED
HORN RELAY & BUZZER ASM (IGN KEY BUZZER REF)
HORNS
16 DK GRN
16 DK GRN
10 RED
12 RED
16 BLK
AU
16 BLK
11
18 BLK
HORN BUTTON
12 RED
16 BRN
12 RED
20 PINK DBL BLK STR
FV
18 PINK DBL BLK STR
18 BLK
18 BLK DBL VLT STR
ON-OFF
IGN SW-KEY BUZZER SW (SHOWN KEY IN IGN SW)
EY
BT
12 WHT
X
10 RED
DOOR JAMB SWITCH (SHOWN IN DOOR OPEN POSITION)
18 DK GRN
TO DOOR COURTESY LAMP INSTALLED BY BODY BUILDER'S
B2
24 BRN SGL WHT STR (100 ± 10 OHM)
12 RED
12 RED
BAT
FIELD (ROTOR)
STATOR
REGULATOR
80 AMP GENERATOR
16 LT GRN
RH
BACK UP LPS
16 LT GRN
16 LT GRN
16 LT GRN
LH
12 PURPLE
16 LT GRN
10
18 BRN
18 LT BLUE
NEUT
REV
DRIVE
18 BLK
16 DK GRN
18 PINK DBL BLK STR
12 PURPLE
NEUT START B/U & SAFETY SW (SHOWN IN START POSITION)
FY
18 LT BLUE
SOLENOID ENG THROTTLE STOP
ENGINE THROTTLE STOP RPO FOR 455 ENGINE STD FOR 403 ENGINE
12 RED
12 PINK
CX
18 BLK DBL WHT STR
18 PINK
18 BLK DBL WHT STR
18 BLK DBL WHT STR
12 PINK
SOL
START
IGN-1
BAT-1
OFF
ACC
12 BRN
ACC
BAT-2
OFF
ACC
IGN-3
BAT-3
OFF
GRD-1
GRD
18 TAN
IGNITION SWITCH
SPARK PLUGS (LHS)
7 5 3 1
DISTRIBUTOR
FIRING ORDER 1-8-4-3-6-5-7-2
8 6 4 2
SPARK PLUGS (RHS)
12 BRN
12 BRN
12 BRN
10 RED
12 PIN

IGNITION SWITCH	
KEY POSITION	CIRCUIT
START	IGN-1 BAT-1 & SOL CONNECTOR GRD-1 & GRD-2 GROUNDED
RUN	IGN-1 & BAT-1 CONNECTOR ACC & BAT-2 CONNECTOR IGN-3 & BAT-3 CONNECTOR
OFF	OPEN
OFF-LOCKED	OPEN
ACCESSORY	ACC & BAT-2 CONNECTOR

DIFFERENTIAL BRAKE SW

LOW COOLANT

TRANSMISSION CONTROL

WARNING TELL-TALES

ELECTRO-LEVEL WARNING RPO

CRUISE CONTROL RPO

LOW FUEL INDICATOR RPO

INSTRUMENT CLUSTER

FUEL TANKS

SPEEDOMETER

FIBER OPTICS

DOME LPS

LIGHTING

CIG LIGHTER

DIRECTIONAL SIG

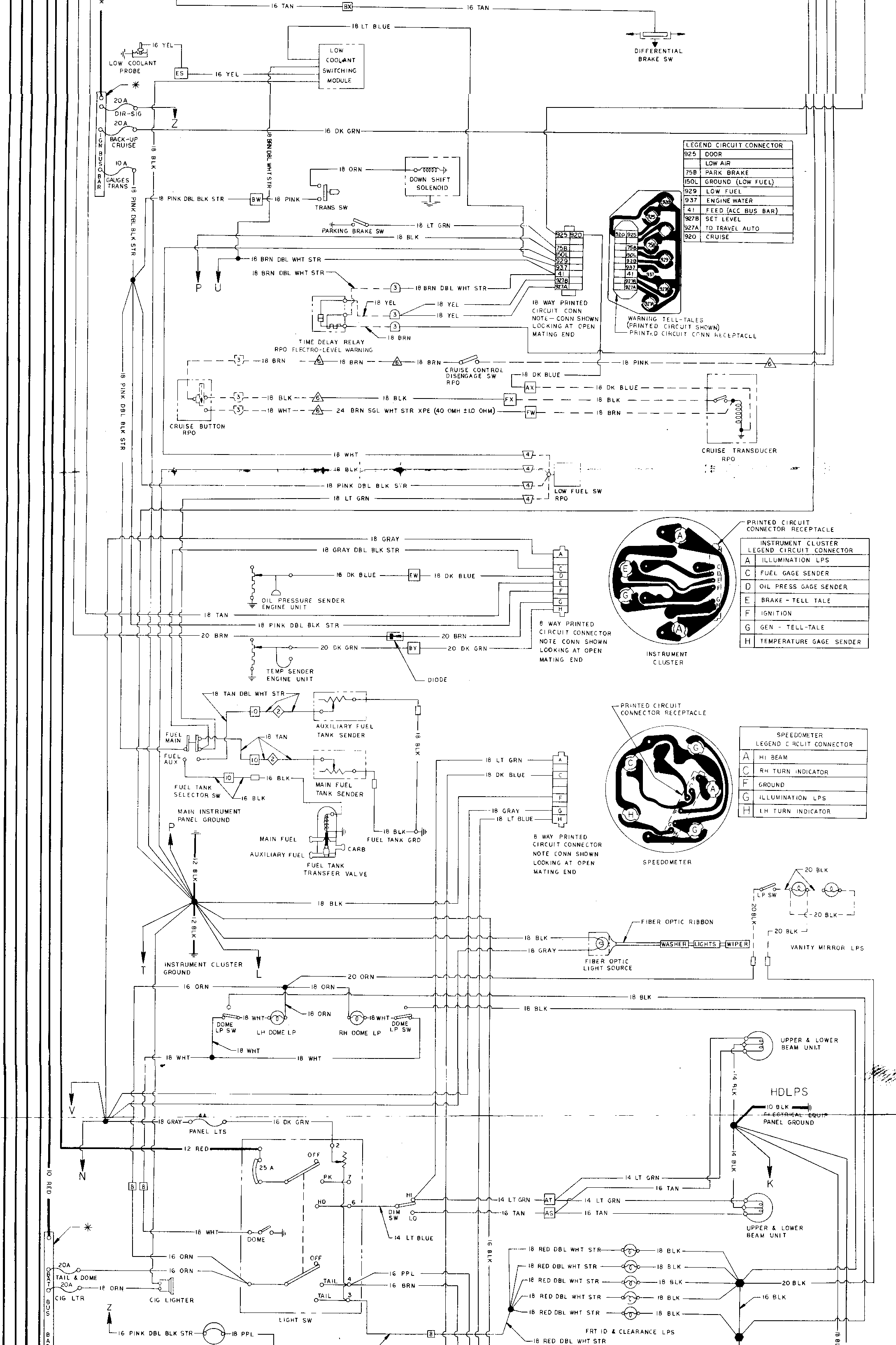
16 TAN
BX
16 TAN
DIFFERENTIAL BRAKE SW
18 LT BLUE
16 YEL
LOW COOLANT PROBE
ES
16 YEL
LOW COOLANT SWITCHING MODULE
20A DIR-SIG
Z
20A BACK-UP CRUISE
IGN BUS BAR
10 A GAUGES TRANS
18 BLK
18 BRN DBL WHT STR
16 DK GRN
18 ORN
DOWN SHIFT SOLENOID
18 PINK DBL BLK STR
BW
18 PINK
TRANS SW
PARKING BRAKE SW
18 LT GRN
18 BLK
18 BRN DBL WHT STR
P
U
18 BRN DBL WHT STR
18 BRN DBL WHT STR
18 YEL
18 YEL
18 YEL
18 BRN
TIME DELAY RELAY RPO ELECTRO-LEVEL WARNING
18 WAY PRINTED CIRCUIT CONN NOTE - CONN SHOWN LOOKING AT OPEN MATING END
WARNING TELL-TALES (PRINTED CIRCUIT SHOWN) PRINTED CIRCUIT CONN RECEPTACLE
18 BRN
18 BRN
18 BRN
CRUISE CONTROL DISENGAGE SW RPO
18 PINK
18 DK BLUE
AX
18 DK BLUE
18 BLK
FX
18 BLK
18 WHT
24 BRN SGL WHT STR XPE (40 OMH ±1.0 OHM)
FW
18 BRN
CRUISE BUTTON RPO
CRUISE TRANSDUCER RPO
18 WHT
18 BLK
18 PINK DBL BLK STR
18 LT GRN
LOW FUEL SW RPO
18 GRAY
18 GRAY DBL BLK STR
16 DK BLUE
EW
16 DK BLUE
OIL PRESSURE SENDER ENGINE UNIT
18 TAN
18 PINK DBL BLK STR
20 BRN
20 BRN
20 DK GRN
BY
20 DK GRN
TEMP SENDER ENGINE UNIT
DIODE
8 WAY PRINTED CIRCUIT CONNECTOR NOTE CONN SHOWN LOOKING AT OPEN MATING END
PRINTED CIRCUIT CONNECTOR RECEPTACLE
INSTRUMENT CLUSTER
18 TAN DBL WHT STR
AUXILIARY FUEL TANK SENDER
18 BLK
FUEL MAIN
FUEL AUX
18 TAN
MAIN FUEL TANK SENDER
16 BLK
FUEL TANK SELECTOR SW
16 BLK
MAIN INSTRUMENT PANEL GROUND
MAIN FUEL
AUXILIARY FUEL
CARB
FUEL TANK TRANSFER VALVE
18 BLK
FUEL TANK GRD
12 BLK
18 LT GRN
18 DK BLUE
18 GRAY
18 LT BLUE
8 WAY PRINTED CIRCUIT CONNECTOR NOTE CONN SHOWN LOOKING AT OPEN MATING END
PRINTED CIRCUIT CONNECTOR RECEPTACLE
SPEEDOMETER
18 BLK
12 BLK
T
L
INSTRUMENT CLUSTER GROUND
18 BLK
18 GRAY
FIBER OPTIC RIBBON
WASHER
LIGHTS
WIPER
FIBER OPTIC LIGHT SOURCE
LP SW
20 BLK
20 BLK
20 BLK
20 BLK
VANITY MIRROR LPS
20 ORN
16 ORN
18 ORN
18 BLK
18 BLK
18 ORN
18 WHT
DOME LP SW
LH DOME LP
RH DOME LP
DOME LP SW
18 WHT
18 WHT
18 WHT
18 WHT
UPPER & LOWER BEAM UNIT
HDLPS
14 BLK
10 BLK
ELECTRICAL EQUIP PANEL GROUND
V
18 GRAY
4A PANEL LTS
16 DK GRN
12 RED
N
10 RED
OFF
25 A
PK
HD
14 LT GRN
16 TAN
K
14 LT GRN
AT
14 LT GRN
16 TAN
AS
16 TAN
DIM SW
HI
LO
14 LT BLUE
UPPER & LOWER BEAM UNIT
18 WHT
DOME
16 BLK
16 ORN
16 ORN
OFF
20A TAIL & DOME
20A CIG LTR
18 ORN
CIG LIGHTER
TAIL
TAIL
16 PPL
16 BRN
LIGHT SW
18 RED DBL WHT STR
18 BLK
20 BLK
16 BLK
FRT ID & CLEARANCE LPS
Z
16 PINK DBL BLK STR
18 PPL

LEGEND	CIRCUIT CONNECTOR
925	DOOR
	LOW AIR
75B	PARK BRAKE
150L	GROUND (LOW FUEL)
929	LOW FUEL
937	ENGINE WATER
41	FEED (ACC BUS BAR)
927B	SET LEVEL
927A	TO TRAVEL AUTO
920	CRUISE

INSTRUMENT CLUSTER

LEGEND	CIRCUIT CONNECTOR
A	ILLUMINATION LPS
C	FUEL GAGE SENDER
D	OIL PRESS GAGE SENDER
E	BRAKE - TELL TALE
F	IGNITION
G	GEN - TELL-TALE
H	TEMPERATURE GAGE SENDER

SPEEDOMETER

LEGEND	CIRCUIT CONNECTOR
A	HI BEAM
C	RH TURN INDICATOR
F	GROUND
G	ILLUMINATION LPS
H	LH TURN INDICATOR

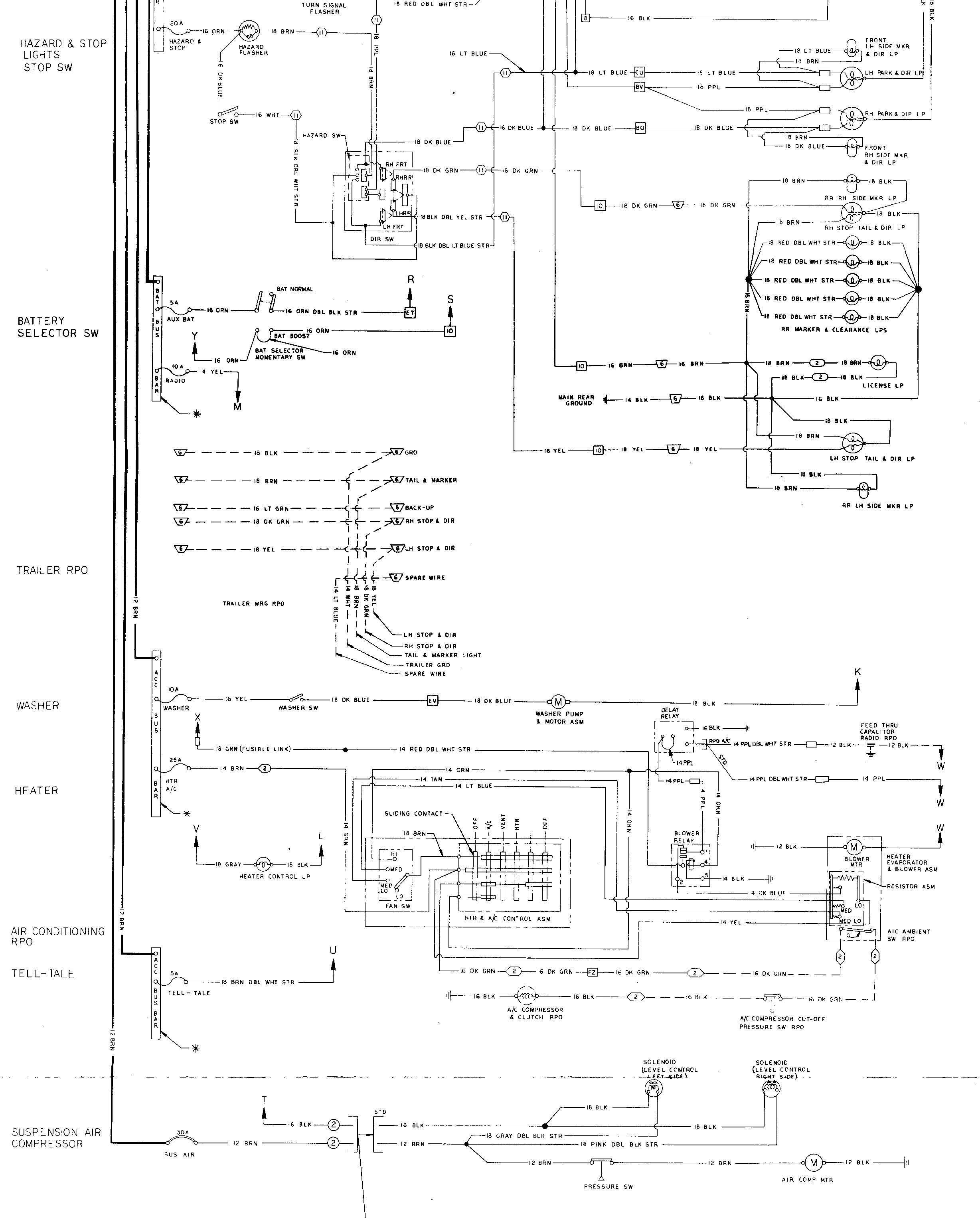
HAZARD & STOP LIGHTS STOP SW
BATTERY SELECTOR SW
TRAILER RPO
WASHER
HEATER
AIR CONDITIONING RPO
TELL-TALE
SUSPENSION AIR COMPRESSOR
TURN SIGNAL FLASHER
18 RED DBL WHT STR
20A
16 ORN
HAZARD & STOP
HAZARD FLASHER
18 BRN
18 PPL
16 DK BLUE
STOP SW
16 WHT
18 BLK DBL WHT STR
HAZARD SW
18 DK BLUE
RH FRT
RHRR
LHRR
LH FRT
DIR SW
18 DK GRN
18 BLK DBL YEL STR
18 BLK DBL LT BLUE STR
16 LT BLUE
16 DK BLUE
16 DK GRN
16 BLK
18 LT BLUE
18 BRN
FRONT LH SIDE MKR & DIR LP
LH PARK & DIR LP
RH PARK & DIR LP
FRONT RH SIDE MKR & DIR LP
18 PPL
18 DK BLUE
RR RH SIDE MKR LP
18 BLK
RH STOP-TAIL & DIR LP
18 RED DBL WHT STR
RR MARKER & CLEARANCE LPS
16 BRN
LICENSE LP
MAIN REAR GROUND
14 BLK
16 YEL
18 YEL
LH STOP TAIL & DIR LP
RR LH SIDE MKR LP
BAT BUS BAR
5A
AUX BAT
16 ORN DBL BLK STR
BAT NORMAL
BAT BOOST
BAT SELECTOR MOMENTARY SW
10A
RADIO
14 YEL
R
S
Y
M
GRD
TAIL & MARKER
BACK-UP
RH STOP & DIR
LH STOP & DIR
SPARE WIRE
16 LT GRN
TRAILER WRG RPO
14 LT BLUE
14 WHT
18 BRN
18 DK GRN
18 YEL
TAIL & MARKER LIGHT
TRAILER GRD
12 BRN
ACC BUS BAR
WASHER
16 YEL
WASHER SW
EV
WASHER PUMP & MOTOR ASM
K
X
18 GRN (FUSIBLE LINK)
14 RED DBL WHT STR
DELAY RELAY
16 BLK
RPO A/C
STD
14 PPL DBL WHT STR
14 PPL
FEED THRU CAPACITOR RADIO RPO
12 BLK
W
25A
HTR A/C
14 BRN
14 ORN
14 TAN
14 LT BLUE
SLIDING CONTACT
OFF
A/C
VENT
HTR
DEF
HI
MED
MED LO
LO
FAN SW
HTR & A/C CONTROL ASM
BLOWER RELAY
V
L
18 GRAY
HEATER CONTROL LP
BLOWER MTR
HEATER EVAPORATOR & BLOWER ASM
RESISTOR ASM
14 DK BLUE
14 YEL
A/C AMBIENT SW RPO
U
18 BRN DBL WHT STR
TELL-TALE
16 DK GRN
FZ
A/C COMPRESSOR & CLUTCH RPO
A/C COMPRESSOR CUT-OFF PRESSURE SW RPO
SOLENOID (LEVEL CONTROL LEFT SIDE)
SOLENOID (LEVEL CONTROL RIGHT SIDE)
T
30A
SUS AIR
18 GRAY DBL BLK STR
18 PINK DBL BLK STR
PRESSURE SW
AIR COMP MTR

MD-15305

ELECTRO-LEVEL
RPO

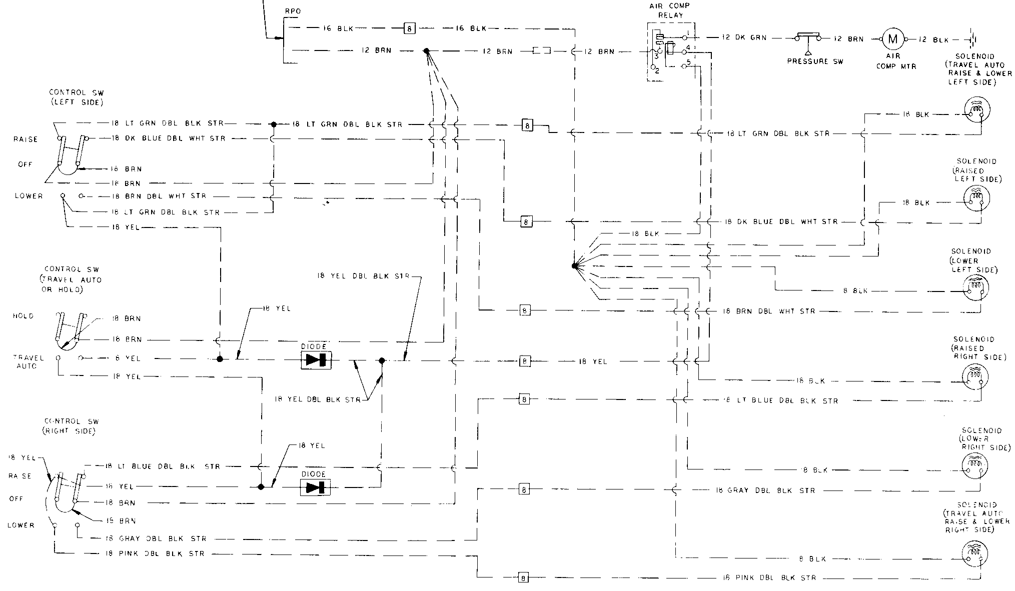
RPO
16 BLK
8
16 BLK
12 BRN
12 BRN
12 BRN
AIR COMP RELAY
1
2
3
4
5
12 DK GRN
PRESSURE SW
12 BRN
M
AIR COMP MTR
12 BLK
SOLENOID (TRAVEL AUTO RAISE & LOWER LEFT SIDE)
CONTROL SW (LEFT SIDE)
RAISE
OFF
LOWER
18 LT GRN DBL BLK STR
18 DK BLUE DBL WHT STR
16 BRN
18 BRN
18 BRN DBL WHT STR
18 LT GRN DBL BLK STR
18 YEL
18 LT GRN DBL BLK STR
18 LT GRN DBL BLK STR
18 BLK
SOLENOID (RAISED LEFT SIDE)
18 BLK
18 DK BLUE DBL WHT STR
18 BLK
SOLENOID (LOWER LEFT SIDE)
8 BLK
CONTROL SW (TRAVEL AUTO OR HOLD)
HOLD
TRAVEL AUTO
18 BRN
18 BRN
6 YEL
18 YEL
18 YEL
18 YEL DBL BLK STR
DIODE
18 YEL DBL BLK STR
18 BRN DBL WHT STR
18 YEL
SOLENOID (RAISED RIGHT SIDE)
18 BLK
18 LT BLUE DBL BLK STR
CONTROL SW (RIGHT SIDE)
18 YEL
RAISE
OFF
LOWER
18 YEL
18 LT BLUE DBL BLK STR
16 YEL
DIODE
18 BRN
15 BRN
18 GRAY DBL BLK STR
18 PINK DBL BLK STR
SOLENOID (LOWER RIGHT SIDE)
8 BLK
18 GRAY DBL BLK STR
SOLENOID (TRAVEL AUTO RAISE & LOWER RIGHT SIDE)
8 BLK
18 PINK DBL BLK STR

RADIO – RPO
NOTE: SEE HEATER
CIRCUIT FOR CAPACITOR

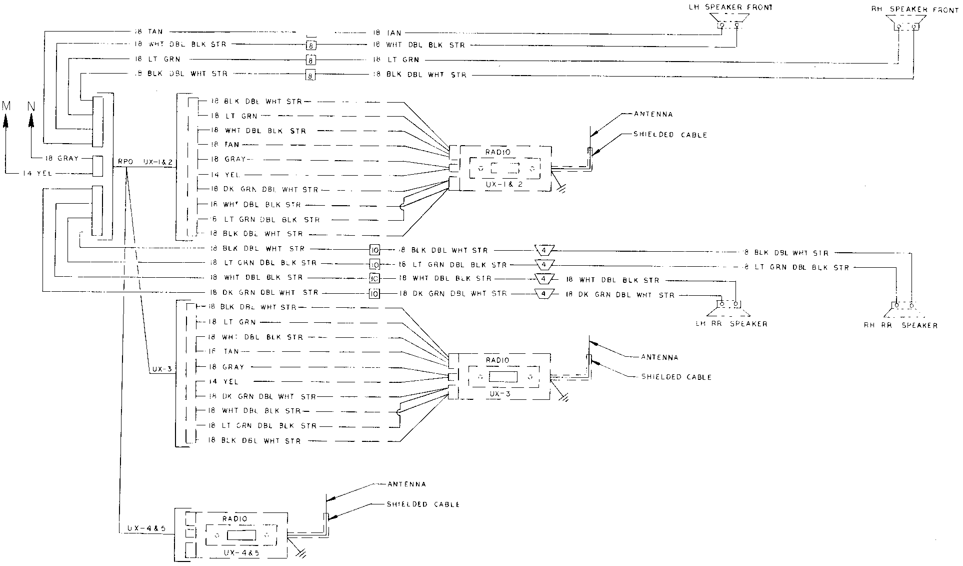
LH SPEAKER FRONT
RH SPEAKER FRONT
18 TAN
18 WHT DBL BLK STR
18 LT GRN
18 BLK DBL WHT STR
8
18 TAN
18 WHT DBL BLK STR
18 LT GRN
18 BLK DBL WHT STR
M
N
18 GRAY
14 YEL
RPO
UX-1&2
18 BLK DBL WHT STR
18 LT GRN
18 WHT DBL BLK STR
18 TAN
18 GRAY
14 YEL
18 DK GRN DBL WHT STR
18 WHT DBL BLK STR
16 LT GRN DBL BLK STR
18 BLK DBL WHT STR
RADIO
UX-1& 2
ANTENNA
SHIELDED CABLE
18 BLK DBL WHT STR
18 LT GRN DBL BLK STR
18 WHT DBL BLK STR
18 DK GRN DBL WHT STR
10
18 BLK DBL WHT STR
16 LT GRN DBL BLK STR
18 WHT DBL BLK STR
18 DK GRN DBL WHT STR
4
18 BLK DBL WHT STR
18 LT GRN DBL BLK STR
18 WHT DBL BLK STR
18 DK GRN DBL WHT STR
LH RR SPEAKER
RH RR SPEAKER
UX-3
18 BLK DBL WHT STR
18 LT GRN
18 WHT DBL BLK STR
18 TAN
18 GRAY
14 YEL
18 DK GRN DBL WHT STR
18 WHT DBL BLK STR
18 LT GRN DBL BLK STR
18 BLK DBL WHT STR
RADIO
UX-3
ANTENNA
SHIELDED CABLE
UX-4&5
RADIO
UX-4&5
ANTENNA
SHIELDED CABLE

LEGEND

↑ CIRCUIT IDENTIFICATION

SYMBOL	JUNCTION	FUNCTION	LOCATION
AS THRU EZ	LETTERED TERM. WIRE CAVITY @ WIRE END OF 40 WAY CONN. (PART OF INSTR. PANEL HARN. ASM)	INSTR. PANEL HARN. TO ENGINE HARN. & FWD LP WIRING HARN	ENGINE COMPARTMENT DASH PANEL UPPER RH SIDE
3	~~3 WAY MULTIPLE CONNECTOR~~	~~INSTR PANEL HARN TO POWER LEVELER WARNING~~	~~UPPER INSTR PANEL AT GAGE CLUSTER~~
2	2 WAY MULTIPLE CONNECTOR	REAR BODY HARN TO LICENSE LP	REAR LICENSE PLATE AREA
11	11 WAY MULTIPLE CONNECTOR	INSTR PANEL HARN TO DIR SW HARN	UNDER INSTR PANEL ON STEERING COLUMN
2	2 WAY MULTIPLE CONNECTOR	SIDE BODY HARN TO FUEL TANK SENDER	LH FRAME RAIL FRONT OF MAIN FUEL TANK
3	3 WAY MULTIPLE CONNECTOR	REAR SPEAKERS	REAR OF VEHICLE BOTH CORNERS
4	4 WAY MULTIPLE CONNECTOR	INSTR PANEL HARN TO LOW FUEL INDICATOR	UNDER INSTR PANEL AT TELL TALE
6	6 WAY MULTIPLE CONNECTOR	SIDE BODY HARN TO REAR BODY HARN	LEFT REAR CARLING
2	2 WAY MULTIPLE CONNECTOR	HEATER & AIR CONDITIONING FEED	UNDER INSTR PANEL AT HEATER CONTROLS
10	10 WAY MULTIPLE CONNECTOR	INSTR PANEL HARN TO SIDE BODY HARN	UNDER INSTR PANEL UPPER LH SIDE OF DASH PANEL
○	TERMINAL OR CONNECTOR TERMINATION	RELATED CIRCUITS	
•	SPLICE		
●	SPLICE	FRONT ROOF HARN GROUND CIRCUIT	FRONT ROOF NEAR DOME LIGHTS & SPEAKERS
∽	FUSE	FUSE BLOCK – PART OF INSTR PANEL HARN	BEHIND GLOVE BOX COMPARTMENT
30A ⌒	CIRCUIT BREAKER		
— — —	BROKEN LINES & SPECIFIED RPO DENOTES WRG & PARTS OTHER THAN STD & NOT IN STD WRG HARN ASM'S		
✳	BUS BAR PART OF FUSE BLOCK	FUSE BLOCK PART OF INSTR PANEL HARN	
6	6 WAY MULTIPLE CONNECTOR	CRUISE CONTROL	UNDER INSTR PANEL AT STEERING COLUMN
3	3 WAY MULTIPLE CONNECTOR	CRUISE CONTROL	UNDER INSTR PANEL AT STEERING COLUMN
o	JUNCTION BLOCK (FUSIBLE LINK)	RELATED CIRCUITS	ENGINE COMPARTMENT — DASH PANEL UPPER RH SIDE
▭	SINGLE LINE CONNECTOR	RELATED CIRCUITS	
8	8 WAY MULTIPLE CONNECTOR	INSTR PANEL HARN TO FRONT ROOF HARN	UNDER INSTR PANEL UPPER LH SIDE
60A ⌒	LINE CIRCUIT BREAKER	CIRCUIT PROTECTOR FOR LIVING AREA BATTERY	ENGINE COMPARTMENT-DASH PANEL UPPER R.H SIDE
2	2 WAY MULTIPLE CONNECTOR	AMBIENT SWITCH FOR AIR CONDITIONING	PART OF HEATER/AIR CONDITIONING UNIT
2	2 WAY MULTIPLE CONNECTORS	INSTR PANEL HARN TO LEVEL CONTROL HARN	UNDER INSTR PANEL AT STEERING COLUMN