BODY GROUND

ENGINE GROUND

BATTERY

BATTERY AUXILIARY

COMPARTMENT AREA PICKUP JCT

STARTER

FUSIBLE LINK

ENGINE COMPARTMENT LP RPO

BAT PICK UP JCT

FUSIBLE LINK

HORNS

GEN OUTPUT DIODES

IGN KEY WARNING BUZZER

GENERATOR

BACK-UP LPS

NEUT START BACK-UP & SAFETY SW

SOLENOID-ENGINE THROTTLE STOP RPO

IGNITION SW

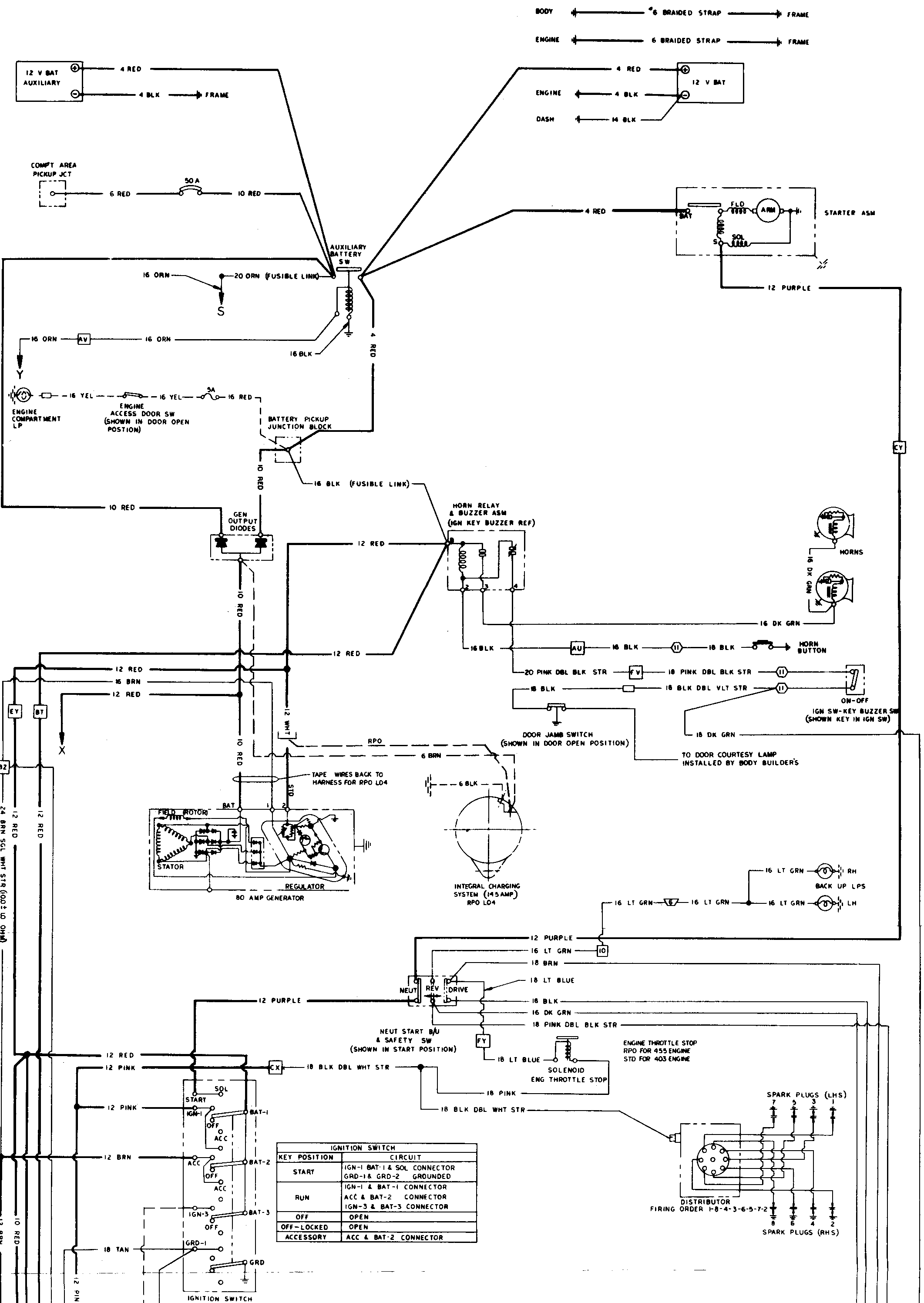

BODY
#6 BRAIDED STRAP
FRAME
ENGINE
6 BRAIDED STRAP
FRAME
12 V BAT AUXILIARY
4 RED
4 BLK
FRAME
4 RED
12 V BAT
ENGINE
4 BLK
DASH
14 BLK
COMP'T AREA PICKUP JCT
6 RED
50 A
10 RED
4 RED
STARTER ASM
BAT
FLD
ARM
SOL
S
AUXILIARY BATTERY SW
16 ORN
20 ORN (FUSIBLE LINK)
S
16 ORN
AV
16 ORN
16 BLK
4 RED
Y
12 PURPLE
16 YEL
16 YEL
5A
16 RED
ENGINE COMPARTMENT LP
ENGINE ACCESS DOOR SW (SHOWN IN DOOR OPEN POSTION)
BATTERY PICKUP JUNCTION BLOCK
10 RED
16 BLK (FUSIBLE LINK)
EY
10 RED
GEN OUTPUT DIODES
HORN RELAY & BUZZER ASM (IGN KEY BUZZER REF)
12 RED
HORNS
16 DK GRN
16 DK GRN
10 RED
12 RED
16 BLK
AU
16 BLK
11
18 BLK
HORN BUTTON
12 RED
16 BRN
12 RED
20 PINK DBL BLK STR
FV
18 PINK DBL BLK STR
11
18 BLK
18 BLK DBL VLT STR
11
ON-OFF
IGN SW-KEY BUZZER SW (SHOWN KEY IN IGN SW)
EY
BT
X
12 WHT
DOOR JAMB SWITCH (SHOWN IN DOOR OPEN POSITION)
18 DK GRN
TO DOOR COURTESY LAMP INSTALLED BY BODY BUILDER'S
RPO
6 BRN
BZ
10 RED
TAPE WIRES BACK TO HARNESS FOR RPO L04
6 BLK
STD
24 BRN SGL WHT STR (100±10 OHM)
12 RED
12 RED
BAT
FIELD (ROTOR)
STATOR
REGULATOR
80 AMP GENERATOR
INTEGRAL CHARGING SYSTEM (145 AMP) RPO L04
16 LT GRN
RH
BACK UP LPS
16 LT GRN
16 LT GRN
16 LT GRN
LH
12 PURPLE
16 LT GRN
10
18 BRN
18 LT BLUE
NEUT
REV
DRIVE
12 PURPLE
18 BLK
16 DK GRN
18 PINK DBL BLK STR
NEUT START B/U & SAFETY SW (SHOWN IN START POSITION)
FY
18 LT BLUE
SOLENOID ENG THROTTLE STOP
ENGINE THROTTLE STOP RPO FOR 455 ENGINE STD FOR 403 ENGINE
12 RED
12 PINK
CX
18 BLK DBL WHT STR
18 PINK
18 BLK DBL WHT STR
SOL
START
IGN-1
BAT-1
OFF
ACC
12 PINK
12 BRN
ACC
BAT-2
OFF
ACC
IGN-3
BAT-3
OFF
GRD-1
18 TAN
GRD
IGNITION SWITCH
12 BRN
12 BRN
12 BRN
10 RED
12 PNK
SPARK PLUGS (LHS)
7 5 3 1
DISTRIBUTOR
FIRING ORDER 1-8-4-3-6-5-7-2
8 6 4 2
SPARK PLUGS (RHS)

| IGNITION SWITCH | |
|---|---|
| KEY POSITION | CIRCUIT |
| START | IGN-1 BAT-1 & SOL CONNECTOR<br>GRD-1 & GRD-2 GROUNDED |
| RUN | IGN-1 & BAT-1 CONNECTOR<br>ACC & BAT-2 CONNECTOR<br>IGN-3 & BAT-3 CONNECTOR |
| OFF | OPEN |
| OFF-LOCKED | OPEN |
| ACCESSORY | ACC & BAT-2 CONNECTOR |

DIFFERENTIAL BRAKE SW
VOLTMETER RPO
LOW COOLANT

TRANSMISSION CONTROL

WARNING TELL-TALES

ELECTRO-LEVEL WARNING

CRUISE CONTROL RPO

LOW FUEL INDICATOR RPO

INSTRUMENT CLUSTER

FUEL TANKS

SPEEDOMETER

FIBER OPTICS

DOME LPS

LIGHTING

CIG LIGHTER

DIRECTIONAL SIG

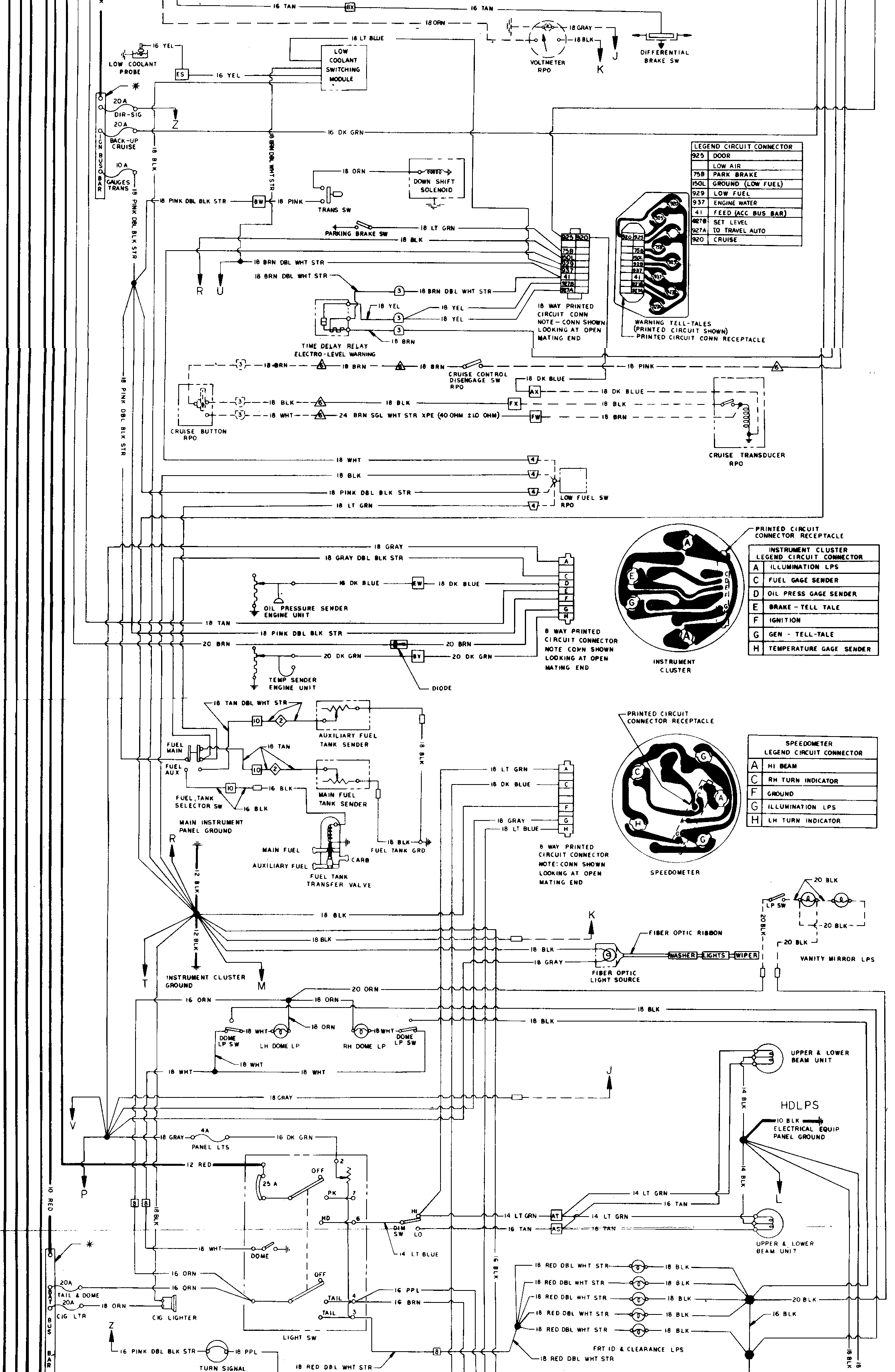
16 TAN
BX
16 TAN
18 ORN
18 GRAY
18 BLK
K
J
VOLTMETER RPO
DIFFERENTIAL BRAKE SW
16 YEL
LOW COOLANT PROBE
ES
16 YEL
18 LT BLUE
LOW COOLANT SWITCHING MODULE
20A
DIR-SIG
Z
20A
BACK-UP CRUISE
IGN BUS BAR
10A
GAUGES TRANS
16 BLK
18 BRN DBL WHT STR
16 DK GRN
18 ORN
DOWN SHIFT SOLENOID
18 PINK DBL BLK STR
BW
18 PINK
TRANS SW
18 LT GRN
PARKING BRAKE SW
18 BLK
18 BRN DBL WHT STR
R
U
3
18 BRN DBL WHT STR
18 YEL
18 YEL
18 YEL
18 BRN
TIME DELAY RELAY ELECTRO-LEVEL WARNING
18 WAY PRINTED CIRCUIT CONN NOTE – CONN SHOWN LOOKING AT OPEN MATING END
WARNING TELL-TALES (PRINTED CIRCUIT SHOWN)
PRINTED CIRCUIT CONN RECEPTACLE
18 BRN
18 BRN
18 BRN
CRUISE CONTROL DISENGAGE SW RPO
18 PINK
18 DK BLUE
AX
18 DK BLUE
18 BLK
FX
18 BLK
18 WHT
24 BRN SGL WHT STR XPE (40 OHM ±10 OHM)
FW
18 BRN
CRUISE BUTTON RPO
CRUISE TRANSDUCER RPO
18 WHT
18 BLK
18 PINK DBL BLK STR
18 LT GRN
4
LOW FUEL SW RPO
PRINTED CIRCUIT CONNECTOR RECEPTACLE
18 GRAY
18 GRAY DBL BLK STR
16 DK BLUE
EW
18 DK BLUE
OIL PRESSURE SENDER ENGINE UNIT
18 TAN
18 PINK DBL BLK STR
20 BRN
20 BRN
20 DK GRN
BY
20 DK GRN
TEMP SENDER ENGINE UNIT
DIODE
8 WAY PRINTED CIRCUIT CONNECTOR NOTE CONN SHOWN LOOKING AT OPEN MATING END
INSTRUMENT CLUSTER
18 TAN DBL WHT STR
10
2
AUXILIARY FUEL TANK SENDER
18 BLK
FUEL MAIN
FUEL AUX
18 TAN
16 BLK
FUEL TANK SELECTOR SW
16 BLK
MAIN FUEL TANK SENDER
MAIN INSTRUMENT PANEL GROUND
MAIN FUEL
AUXILIARY FUEL
CARB
FUEL TANK TRANSFER VALVE
18 BLK
FUEL TANK GRD
18 LT GRN
18 DK BLUE
18 GRAY
18 LT BLUE
8 WAY PRINTED CIRCUIT CONNECTOR NOTE: CONN SHOWN LOOKING AT OPEN MATING END
PRINTED CIRCUIT CONNECTOR RECEPTACLE
SPEEDOMETER
12 BLK
18 BLK
18 BLK
18 BLK
18 GRAY
FIBER OPTIC RIBBON
WASHER
LIGHTS
WIPER
FIBER OPTIC LIGHT SOURCE
T
M
INSTRUMENT CLUSTER GROUND
20 BLK
LP SW
20 BLK
20 BLK
VANITY MIRROR LPS
20 ORN
16 ORN
18 ORN
18 BLK
18 BLK
DOME LP SW
18 WHT
LH DOME LP
18 ORN
RH DOME LP
18 WHT
DOME LP SW
18 WHT
18 WHT
UPPER & LOWER BEAM UNIT
14 BLK
HDLPS
10 BLK
ELECTRICAL EQUIP PANEL GROUND
18 GRAY
V
18 GRAY
4A
16 DK GRN
PANEL LTS
12 RED
P
25 A
OFF
PK
HD
14 LT GRN
16 TAN
L
HI
DIM SW
LO
14 LT GRN
AT
14 LT GRN
16 TAN
AS
16 TAN
14 LT BLUE
UPPER & LOWER BEAM UNIT
10 RED
18 BLK
18 WHT
DOME
16 BLK
20A
TAIL & DOME
20A
CIG LTR
16 ORN
16 ORN
18 ORN
CIG LIGHTER
OFF
TAIL
TAIL
16 PPL
16 BRN
LIGHT SW
18 RED DBL WHT STR
18 BLK
20 BLK
16 BLK
FRT ID & CLEARANCE LPS
18 RED DBL WHT STR
Z
16 PINK DBL BLK STR
18 PPL
TURN SIGNAL
18 RED DBL WHT STR
8
BUS BAR
18 BLK

| LEGEND | CIRCUIT CONNECTOR |
|---|---|
| 925 | DOOR |
| | LOW AIR |
| 75B | PARK BRAKE |
| 150L | GROUND (LOW FUEL) |
| 929 | LOW FUEL |
| 937 | ENGINE WATER |
| 41 | FEED (ACC BUS BAR) |
| 927B | SET LEVEL |
| 927A | TO TRAVEL AUTO |
| 920 | CRUISE |

| INSTRUMENT CLUSTER LEGEND | CIRCUIT CONNECTOR |
|---|---|
| A | ILLUMINATION LPS |
| C | FUEL GAGE SENDER |
| D | OIL PRESS GAGE SENDER |
| E | BRAKE - TELL TALE |
| F | IGNITION |
| G | GEN - TELL-TALE |
| H | TEMPERATURE GAGE SENDER |

| SPEEDOMETER LEGEND | CIRCUIT CONNECTOR |
|---|---|
| A | HI BEAM |
| C | RH TURN INDICATOR |
| F | GROUND |
| G | ILLUMINATION LPS |
| H | LH TURN INDICATOR |

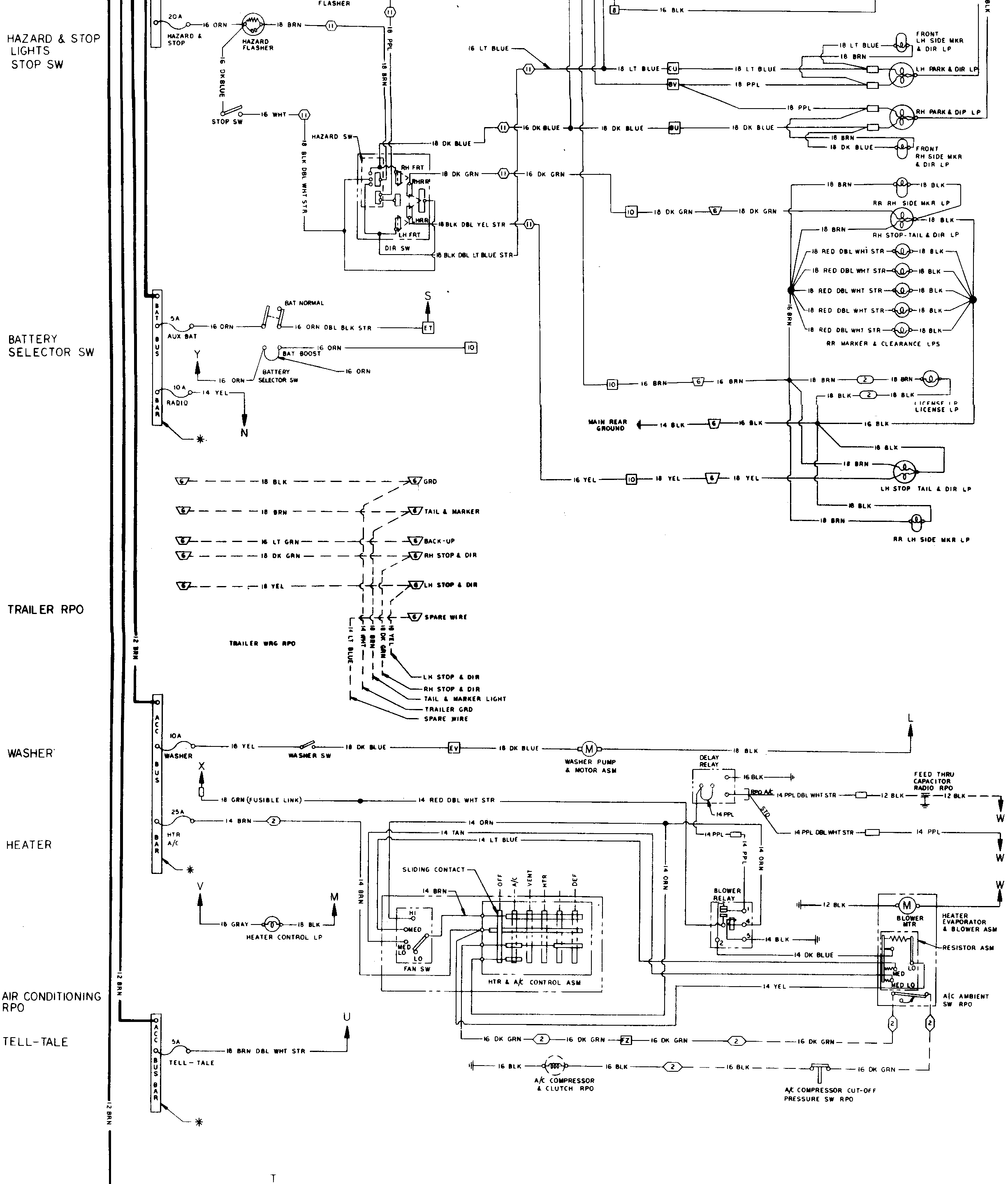
HAZARD & STOP LIGHTS STOP SW
BATTERY SELECTOR SW
TRAILER RPO
WASHER
HEATER
AIR CONDITIONING RPO
TELL-TALE
FLASHER
20A
HAZARD & STOP
16 ORN
18 BRN
HAZARD FLASHER
16 DK BLUE
STOP SW
16 WHT
18 PPL
18 BRN
18 BLK DBL WHT STR
HAZARD SW
RH FRT
RH RR
LH RR
LH FRT
DIR SW
18 DK BLUE
18 DK GRN
18 BLK DBL YEL STR
18 BLK DBL LT BLUE STR
16 LT BLUE
16 DK BLUE
16 DK GRN
16 BLK
18 LT BLUE
18 PPL
18 DK BLUE
CU
BV
BU
FRONT LH SIDE MKR & DIR LP
LH PARK & DIR LP
RH PARK & DIR LP
FRONT RH SIDE MKR & DIR LP
RR RH SIDE MKR LP
RH STOP-TAIL & DIR LP
18 RED DBL WHT STR
18 BLK
RR MARKER & CLEARANCE LPS
16 BRN
LICENSE LP
MAIN REAR GROUND
14 BLK
16 BLK
16 YEL
18 YEL
LH STOP TAIL & DIR LP
RR LH SIDE MKR LP
BAT BUS BAR
5A
AUX BAT
BAT NORMAL
16 ORN DBL BLK STR
ET
S
BAT BOOST
BATTERY SELECTOR SW
Y
10A
RADIO
14 YEL
N
GRD
TAIL & MARKER
BACK-UP
RH STOP & DIR
LH STOP & DIR
SPARE WIRE
16 LT GRN
18 DK GRN
TRAILER WRG RPO
14 LT BLUE
14 WHT
LH STOP & DIR
RH STOP & DIR
TAIL & MARKER LIGHT
TRAILER GRD
SPARE WIRE
12 BRN
ACC BUS BAR
WASHER
16 YEL
WASHER SW
EV
WASHER PUMP & MOTOR ASM
L
X
18 GRN (FUSIBLE LINK)
14 RED DBL WHT STR
DELAY RELAY
16 BLK
RPO A/C
STD
14 PPL DBL WHT STR
12 BLK
FEED THRU CAPACITOR RADIO RPO
W
14 PPL
25A
HTR A/C
14 BRN
14 ORN
14 TAN
14 LT BLUE
SLIDING CONTACT
OFF
A/C
VENT
HTR
DEF
HI
MED
MED LO
LO
FAN SW
HTR & A/C CONTROL ASM
BLOWER RELAY
14 DK BLUE
14 YEL
BLOWER MTR
HEATER EVAPORATOR & BLOWER ASM
RESISTOR ASM
A/C AMBIENT SW RPO
V
18 GRAY
HEATER CONTROL LP
M
16 DK GRN
FZ
A/C COMPRESSOR & CLUTCH RPO
A/C COMPRESSOR CUT-OFF PRESSURE SW RPO
U
18 BRN DBL WHT STR
TELL-TALE
T

**SUSPENSION AIR COMPRESSOR**

**ELECTRO-LEVEL**

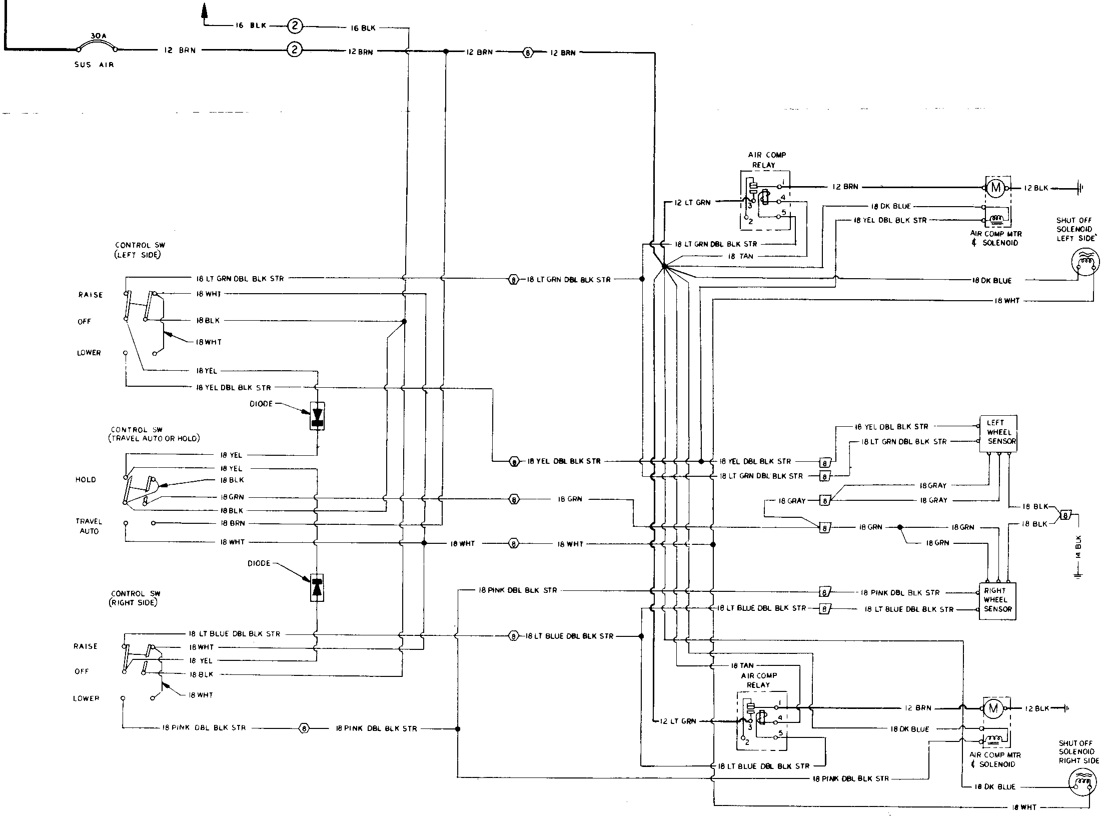
30A
SUS AIR
16 BLK
12 BRN
12 BRN
12 BRN
AIR COMP RELAY
12 LT GRN
12 BRN
M
12 BLK
18 DK BLUE
18 YEL DBL BLK STR
AIR COMP MTR & SOLENOID
SHUT OFF SOLENOID LEFT SIDE
18 LT GRN DBL BLK STR
18 TAN
18 DK BLUE
18 WHT
CONTROL SW (LEFT SIDE)
RAISE
OFF
LOWER
18 LT GRN DBL BLK STR
18 WHT
18 BLK
18 WHT
18 YEL
18 YEL DBL BLK STR
DIODE
CONTROL SW (TRAVEL AUTO OR HOLD)
HOLD
TRAVEL AUTO
18 YEL
18 YEL
18 BLK
18 GRN
18 BLK
18 BRN
18 WHT
18 YEL DBL BLK STR
18 GRN
18 WHT
18 WHT
LEFT WHEEL SENSOR
18 YEL DBL BLK STR
18 LT GRN DBL BLK STR
18 GRAY
18 GRAY
18 GRAY
18 GRN
18 GRN
18 GRN
18 BLK
18 BLK
14 BLK
DIODE
CONTROL SW (RIGHT SIDE)
RAISE
OFF
LOWER
18 PINK DBL BLK STR
18 LT BLUE DBL BLK STR
18 WHT
18 YEL
18 BLK
18 WHT
18 PINK DBL BLK STR
18 LT BLUE DBL BLK STR
RIGHT WHEEL SENSOR
18 PINK DBL BLK STR
18 LT BLUE DBL BLK STR
18 TAN
AIR COMP RELAY
12 LT GRN
12 BRN
M
12 BLK
18 DK BLUE
18 LT BLUE DBL BLK STR
18 PINK DBL BLK STR
AIR COMP MTR & SOLENOID
SHUT OFF SOLENOID RIGHT SIDE
18 DK BLUE
18 WHT
1
2
3
4
5
8

**RADIO - RPO**
NOTE: SEE HEATER CIRCUIT FOR CAPACITOR

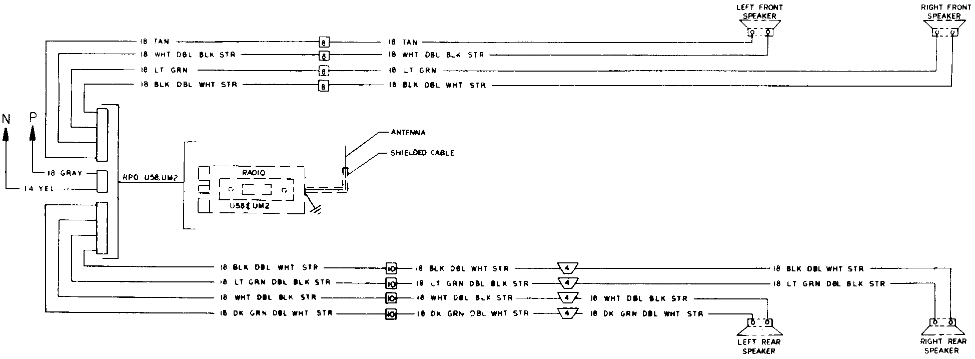
LEFT FRONT SPEAKER
RIGHT FRONT SPEAKER
18 TAN
18 WHT DBL BLK STR
18 LT GRN
18 BLK DBL WHT STR
N
P
18 GRAY
14 YEL
RPO U58,UM2
RADIO
U58 & UM2
ANTENNA
SHIELDED CABLE
18 BLK DBL WHT STR
18 LT GRN DBL BLK STR
18 WHT DBL BLK STR
18 DK GRN DBL WHT STR
10
4
LEFT REAR SPEAKER
RIGHT REAR SPEAKER

## LEGEND

⬆ CIRCUIT IDENTIFICATION

| SYMBOL | JUNCTION | FUNCTION | LOCATION |
|---|---|---|---|
| AS THRU EZ | LETTERED TERM. WIRE CAVITY @ WIRE END OF 40 WAY CONN. (PART OF INSTR. PANEL HARN. ASM) | INSTR. PANEL HARN. TO ENGINE HARN. & FWD LP WIRING HARN | ENGINE COMPARTMENT DASH PANEL UPPER RH SIDE |
| ③ | 3 WAY MULTIPLE CONNECTOR | INSTR PANEL HARN TO POWER LEVELER WARNING | UPPER INSTR PANEL AT GAGE CLUSTER |
| ② | 2 WAY MULTIPLE CONNECTOR | REAR BODY HARN TO LICENSE LP | REAR LICENSE PLATE AREA |
| ⑪ | 11 WAY MULTIPLE CONNECTOR | INSTR PANEL HARN TO DIR SW HARN | UNDER INSTR PANEL ON STEERING COLUMN |
| ◇2 | 2 WAY MULTIPLE CONNECTOR | SIDE BODY HARN TO FUEL TANK SENDER | LH FRAME RAIL FRONT OF MAIN FUEL TANK |
| ⬡3 | 3 WAY MULTIPLE CONNECTOR | REAR SPEAKERS | REAR OF VEHICLE BOTH CORNERS |

| | | | |
|---|---|---|---|
| 4 | 4 WAY MULTIPLE CONNECTOR | INSTR PANEL HARN TO LOW FUEL INDICATOR | UNDER INSTR PANEL AT TELL TALE |
| 6 | 6 WAY MULTIPLE CONNECTOR | SIDE BODY HARN TO REAR BODY HARN | LEFT REAR CARLING |
| 2 | 2 WAY MULTIPLE CONNECTOR | HEATER & AIR CONDITIONING FEED | UNDER INSTR PANEL AT HEATER CONTROLS |
| 10 | 10 WAY MULTIPLE CONNECTOR | INSTR PANEL HARN TO SIDE BODY HARN | UNDER INSTR PANEL UPPER LH SIDE OF DASH PANEL |
| ○ | TERMINAL OR CONNECTOR TERMINATION | RELATED CIRCUITS | |
| ● | SPLICE | | |
| ⬢ | SPLICE | FRONT ROOF HARN GROUND CIRCUIT | FRONT ROOF NEAR DOME LIGHTS & SPEAKERS |
| ∿ | FUSE | FUSE BLOCK – PART OF INSTR PANEL HARN | BEHIND GLOVE BOX COMPARTMENT |
| 30A | CIRCUIT BREAKER | | |
| — — — | BROKEN LINES & SPECIFIED RPO DENOTES WRG & PARTS OTHER THAN STD & NOT IN STD WRG HARN ASM'S | | |
| ✳ | BUS BAR PART OF FUSE BLOCK | FUSE BLOCK PART OF INSTR PANEL HARN | |
| 6 | 6 WAY MULTIPLE CONNECTOR | CRUISE CONTROL | UNDER INSTR PANEL AT STEERING COLUMN |
| 3 | 3 WAY MULTIPLE CONNECTOR | CRUISE CONTROL | UNDER INSTR PANEL AT STEERING COLUMN |
| ▣ | JUNCTION BLOCK (FUSIBLE LINK) | RELATED CIRCUITS | ENGINE COMPARTMENT – DASH PANEL UPPER RH SIDE |
| ▭ | SINGLE LINE CONNECTOR | RELATED CIRCUITS | |
| 8 | 8 WAY MULTIPLE CONNECTOR | INSTR PANEL HARN TO FRONT ROOF HARN | UNDER INSTR PANEL UPPER-LH SIDE |
| 60A | LINE CIRCUIT BREAKER | CIRCUIT PROTECTOR FOR LIVING AREA BATTERY | ENGINE COMPARTMENT-DASH PANEL UPPER R.H SIDE |
| 2 | 2 WAY MULTIPLE CONNECTOR | AMBIENT SWITCH FOR AIR CONDITIONING | PART OF HEATER/AIR CONDITIONING UNIT |
| 2 | 2 WAY MULTIPLE CONNECTORS | INSTR PANEL HARN TO LEVEL CONTROL HARN | UNDER INSTR PANEL AT STEERING COLUMN |
| 8 | 8 WAY MULTIPLE CONNECTOR | LEVEL CONTROL HARN TO SIDE BODY HARN | UNDER INSTR PANEL LOWER LH SIDE |
| 8 | 8 WAY MULTIPLE CONNECTOR | SIDE BODY HARN TO WHEEL SENSOR HARN | LH WHEEL HOUSE AREA |