BODY GROUND

ENGINE GROUND

BATTERY

BATTERY AUXILIARY

BAT PICKUP JCT

STARTER

ENGINE COMPARTMENT LP RPO

BAT. PICKUP JCT

FUSIBLE LINK

HORNS

GEN. OUTPUT DIODES

IGN KEY WARNING BUZZER

GENERATOR

BACK-UP LPS

NEUT START BACK-UP & SAFETY SW.

SOLENOID-ENGINE THROTTLE STOP RPO

IGNITION SW

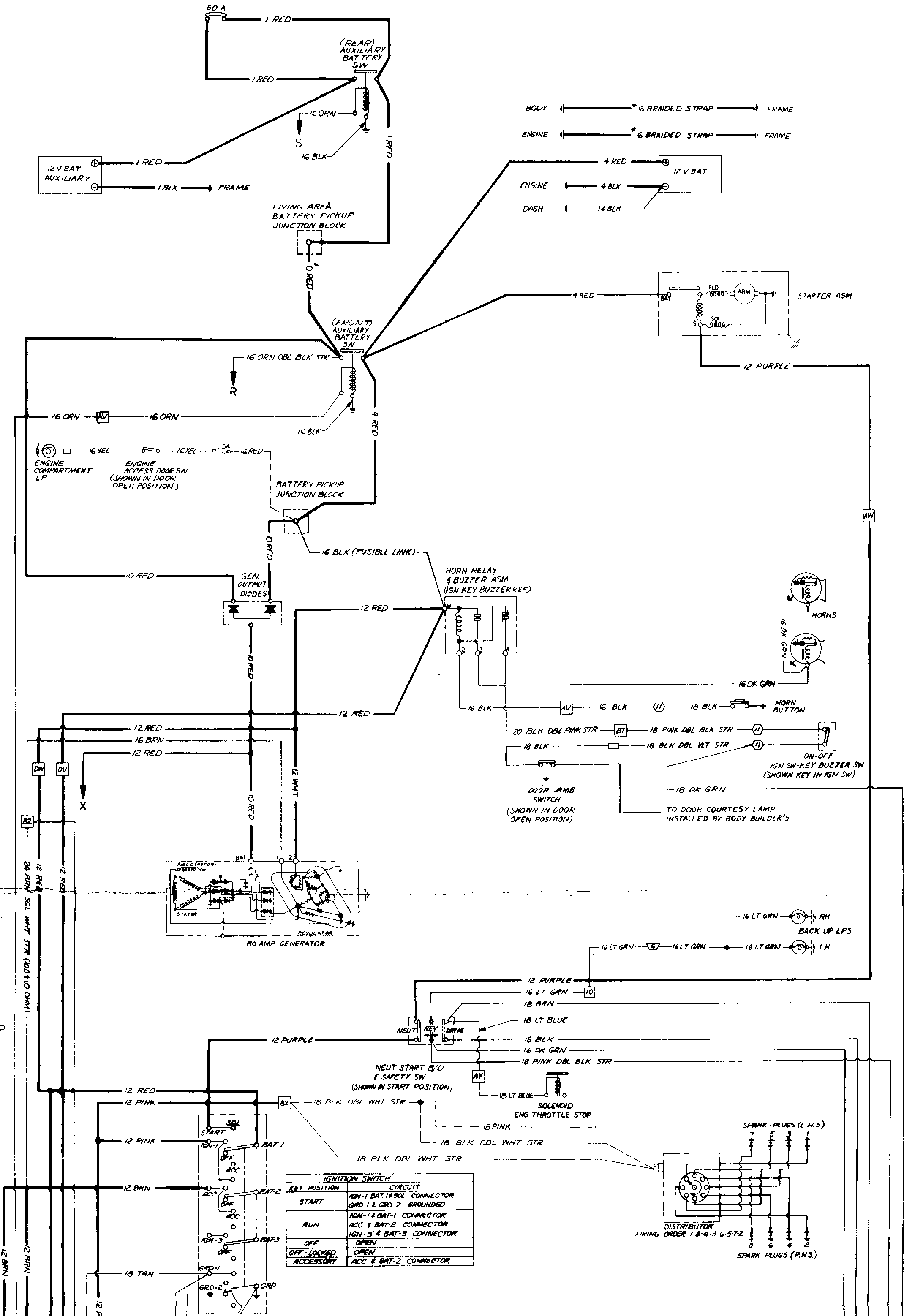
60 A
1 RED
(REAR) AUXILIARY BATTERY SW
1 RED
16 ORN
S
16 BLK
1 RED
12 V BAT AUXILIARY
1 RED
1 BLK
FRAME
BODY
*6 BRAIDED STRAP
FRAME
ENGINE
*6 BRAIDED STRAP
FRAME
4 RED
12 V BAT
ENGINE
4 BLK
DASH
14 BLK
LIVING AREA BATTERY PICKUP JUNCTION BLOCK
0 RED
4 RED
BAT
FLD
ARM
SOL
S
STARTER ASM
(FRONT) AUXILIARY BATTERY SW
16 ORN DBL BLK STR
R
12 PURPLE
16 ORN
AV
16 ORN
16 BLK
4 RED
16 YEL
16 YEL
5A
16 RED
ENGINE COMPARTMENT LP
ENGINE ACCESS DOOR SW (SHOWN IN DOOR OPEN POSITION)
BATTERY PICKUP JUNCTION BLOCK
AW
0 RED
16 BLK (FUSIBLE LINK)
10 RED
GEN OUTPUT DIODES
HORN RELAY & BUZZER ASM (IGN KEY BUZZER REF)
HORNS
16 DK GRN
12 RED
16 DK GRN
10 RED
12 RED
16 BLK
AU
16 BLK
11
18 BLK
HORN BUTTON
12 RED
16 BRN
12 RED
20 BLK DBL PINK STR
BT
18 PINK DBL BLK STR
11
18 BLK
18 BLK DBL VLT STR
11
ON-OFF IGN SW-KEY BUZZER SW (SHOWN KEY IN IGN SW)
DW
DV
X
12 WHT
10 RED
DOOR JAMB SWITCH (SHOWN IN DOOR OPEN POSITION)
18 DK GRN
TO DOOR COURTESY LAMP INSTALLED BY BODY BUILDER'S
BZ
24 BRN SGL WHT STR (1.00±10 OHM)
12 RED
12 RED
BAT
1
2
FIELD (ROTOR)
STATOR
REGULATOR
80 AMP GENERATOR
16 LT GRN
RH
BACK UP LPS
16 LT GRN
16 LT GRN
16 LT GRN
LH
12 PURPLE
16 LT GRN
10
18 BRN
18 LT BLUE
NEUT
REV
DRIVE
12 PURPLE
18 BLK
16 DK GRN
18 PINK DBL BLK STR
NEUT START B/U & SAFETY SW (SHOWN IN START POSITION)
AY
18 LT BLUE
SOLENOID ENG THROTTLE STOP
18 PINK
12 RED
12 PINK
BX
18 BLK DBL WHT STR
18 BLK DBL WHT STR
SOL
START
12 PINK
IGN-1
BAT-1
OFF
ACC
18 BLK DBL WHT STR
SPARK PLUGS (L.H.S.)
7
5
3
1
12 BRN
ACC
BAT-2
OFF
ACC
IGN-3
BAT-3
OFF
DISTRIBUTOR FIRING ORDER 1-8-4-3-6-5-7-2
8
6
4
2
SPARK PLUGS (R.H.S.)
18 TAN
GRD-1
GRD-2
GRD
12 BRN
12 BRN
12 P

IGNITION SWITCH	
KEY POSITION	CIRCUIT
START	IGN-1, BAT-1 & SOL CONNECTOR GRD-1 & GRD-2 GROUNDED
RUN	IGN-1 & BAT-1 CONNECTOR ACC. & BAT-2 CONNECTOR IGN-3 & BAT-3 CONNECTOR
OFF	OPEN
OFF-LOCKED	OPEN
ACCESSORY	ACC. & BAT-2 CONNECTOR

DIFFERENTIAL BRAKE SW

LOW COOLANT

TRANSMISSION CONTROL

WARNING TELL-TALES

POWER LEVELER WARNING RPO

CRUISE CONTROL RPO.

LOW FUEL INDICATOR RPO.

INSTRUMENT CLUSTER

FUEL TANKS

SPEEDOMETER

FIBER OPTICS

DOME LPS

LIGHTING

CIG. LIGHTER

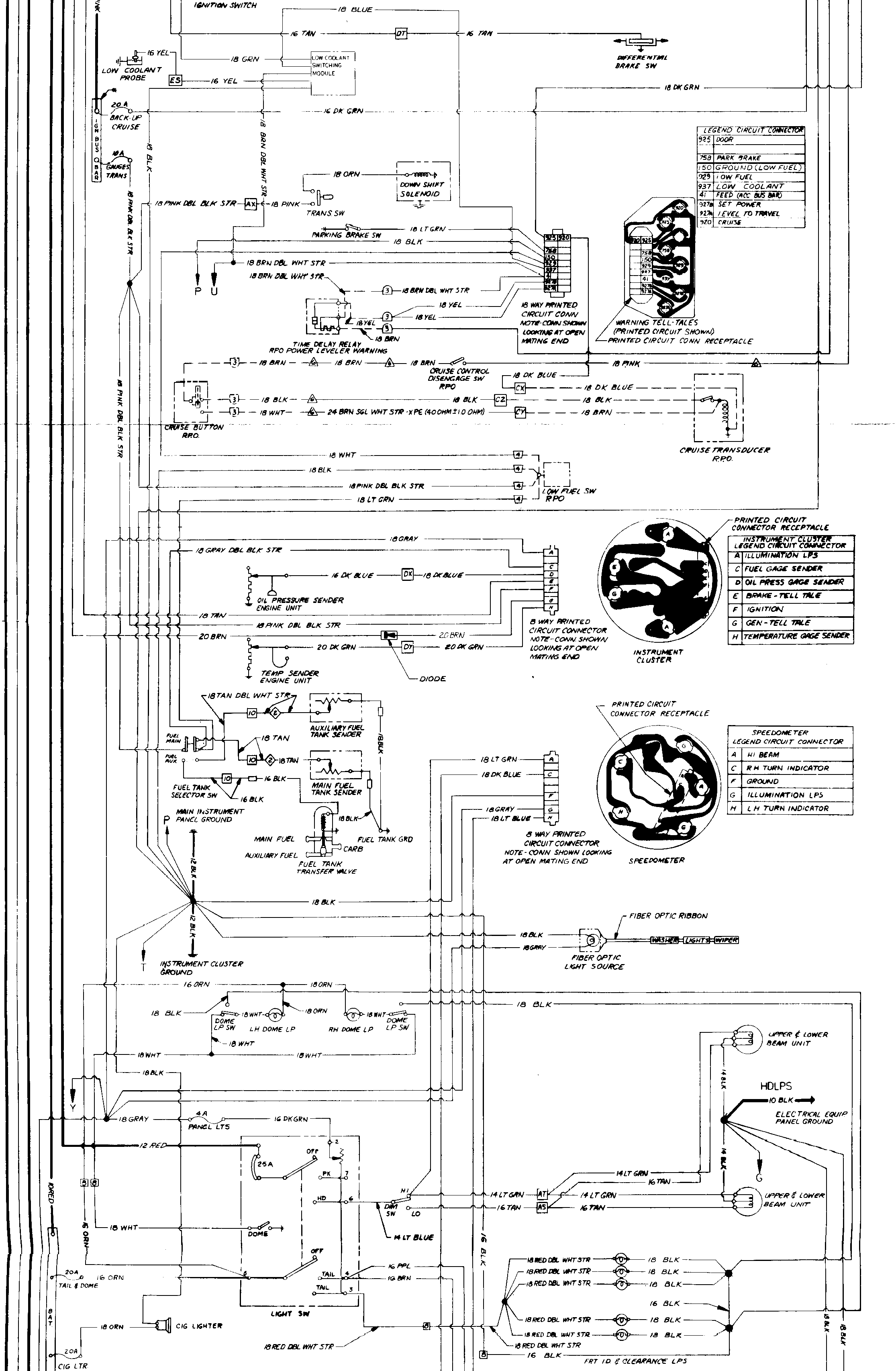
IGNITION SWITCH
18 BLUE
16 TAN
DT
16 TAN
DIFFERENTIAL BRAKE SW
16 YEL
LOW COOLANT PROBE
18 GRN
LOW COOLANT SWITCHING MODULE
ES
16 YEL
18 DK GRN
20 A BACK-UP CRUISE
16 DK GRN
IGN BUS BAR
10 A GAUGES TRANS
18 BLK
18 BRN DBL WHT STR
18 ORN
DOWN SHIFT SOLENOID
18 PINK DBL BLK STR
AX
18 PINK
TRANS SW
PARKING BRAKE SW
18 LT GRN
18 BLK
18 BRN DBL WHT STR
P
U
3
18 BRN DBL WHT STR
18 YEL
18 YEL
18 BRN
TIME DELAY RELAY RPO POWER LEVELER WARNING
18 WAY PRINTED CIRCUIT CONN NOTE-CONN SHOWN LOOKING AT OPEN MATING END
WARNING TELL-TALES (PRINTED CIRCUIT SHOWN)
PRINTED CIRCUIT CONN RECEPTACLE
18 BRN
CRUISE CONTROL DISENGAGE SW RPO
18 PINK
18 DK BLUE
CX
18 BLK
CZ
18 WHT
24 BRN SGL WHT STR - XPE (40 OHM ± 10 OHM)
CY
18 BRN
CRUISE BUTTON RPO.
CRUISE TRANSDUCER RPO.
18 WHT
18 BLK
18 PINK DBL BLK STR
18 LT GRN
4
LOW FUEL SW RPO
18 PINK DBL BLK STR
18 GRAY
18 GRAY DBL BLK STR
16 DK BLUE
DX
18 DK BLUE
OIL PRESSURE SENDER ENGINE UNIT
18 TAN
20 BRN
20 BRN
20 DK GRN
DY
20 DK GRN
DIODE
TEMP SENDER ENGINE UNIT
8 WAY PRINTED CIRCUIT CONNECTOR NOTE-CONN SHOWN LOOKING AT OPEN MATING END
PRINTED CIRCUIT CONNECTOR RECEPTACLE
INSTRUMENT CLUSTER
18 TAN DBL WHT STR
10
AUXILIARY FUEL TANK SENDER
18 BLK
FUEL MAIN
FUEL AUX
18 TAN
18 TAN
16 BLK
FUEL TANK SELECTOR SW
16 BLK
MAIN FUEL TANK SENDER
MAIN INSTRUMENT PANEL GROUND
18 BLK
FUEL TANK GRD
MAIN FUEL
CARB
AUXILIARY FUEL
FUEL TANK TRANSFER VALVE
12 BLK
PRINTED CIRCUIT CONNECTOR RECEPTACLE
18 LT GRN
18 DK BLUE
18 GRAY
18 LT BLUE
8 WAY PRINTED CIRCUIT CONNECTOR NOTE-CONN SHOWN LOOKING AT OPEN MATING END
SPEEDOMETER
18 BLK
12 BLK
FIBER OPTIC RIBBON
18 BLK
18 GRAY
WASHER
LIGHTS
WIPER
FIBER OPTIC LIGHT SOURCE
T
INSTRUMENT CLUSTER GROUND
16 ORN
18 ORN
18 BLK
18 WHT
18 ORN
18 WHT
DOME LP SW
LH DOME LP
RH DOME LP
DOME LP SW
18 WHT
18 WHT
18 WHT
18 BLK
18 BLK
UPPER & LOWER BEAM UNIT
14 BLK
HDLPS
10 BLK
ELECTRICAL EQUIP PANEL GROUND
Y
18 GRAY
4A PANEL LTS
16 DK GRN
12 RED
25A
OFF
2
PK
7
HD
6
HI
DIM SW
LO
14 LT BLUE
14 LT GRN
16 TAN
14 LT GRN
AT
16 TAN
AS
14 LT GRN
16 TAN
UPPER & LOWER BEAM UNIT
G
10 RED
16 ORN
18 WHT
DOME
16 BLK
OFF
6
TAIL
4
16 PPL
16 BRN
TAIL
3
LIGHT SW
20A TAIL & DOME
16 ORN
BAT
18 ORN
CIG LIGHTER
20A CIG LTR
18 RED DBL WHT STR
18 RED DBL WHT STR
18 RED DBL WHT STR
18 BLK
18 BLK
18 BLK
16 BLK
18 RED DBL WHT STR
18 RED DBL WHT STR
18 RED DBL WHT STR
18 BLK
18 BLK
16 BLK
16 BLK
18 BLK
18 RED DBL WHT STR
FRT ID & CLEARANCE LPS

LEGEND CIRCUIT CONNECTOR	
925	DOOR
758	PARK BRAKE
150	GROUND (LOW FUEL)
929	LOW FUEL
937	LOW COOLANT
41	FEED (ACC BUS BAR)
927B	SET POWER
927A	LEVEL TO TRAVEL
920	CRUISE

INSTRUMENT CLUSTER LEGEND CIRCUIT CONNECTOR	
A	ILLUMINATION LPS
C	FUEL GAGE SENDER
D	OIL PRESS GAGE SENDER
E	BRAKE - TELL TALE
F	IGNITION
G	GEN - TELL TALE
H	TEMPERATURE GAGE SENDER

SPEEDOMETER LEGEND CIRCUIT CONNECTOR	
A	HI BEAM
C	RH TURN INDICATOR
F	GROUND
G	ILLUMINATION LPS
H	LH TURN INDICATOR

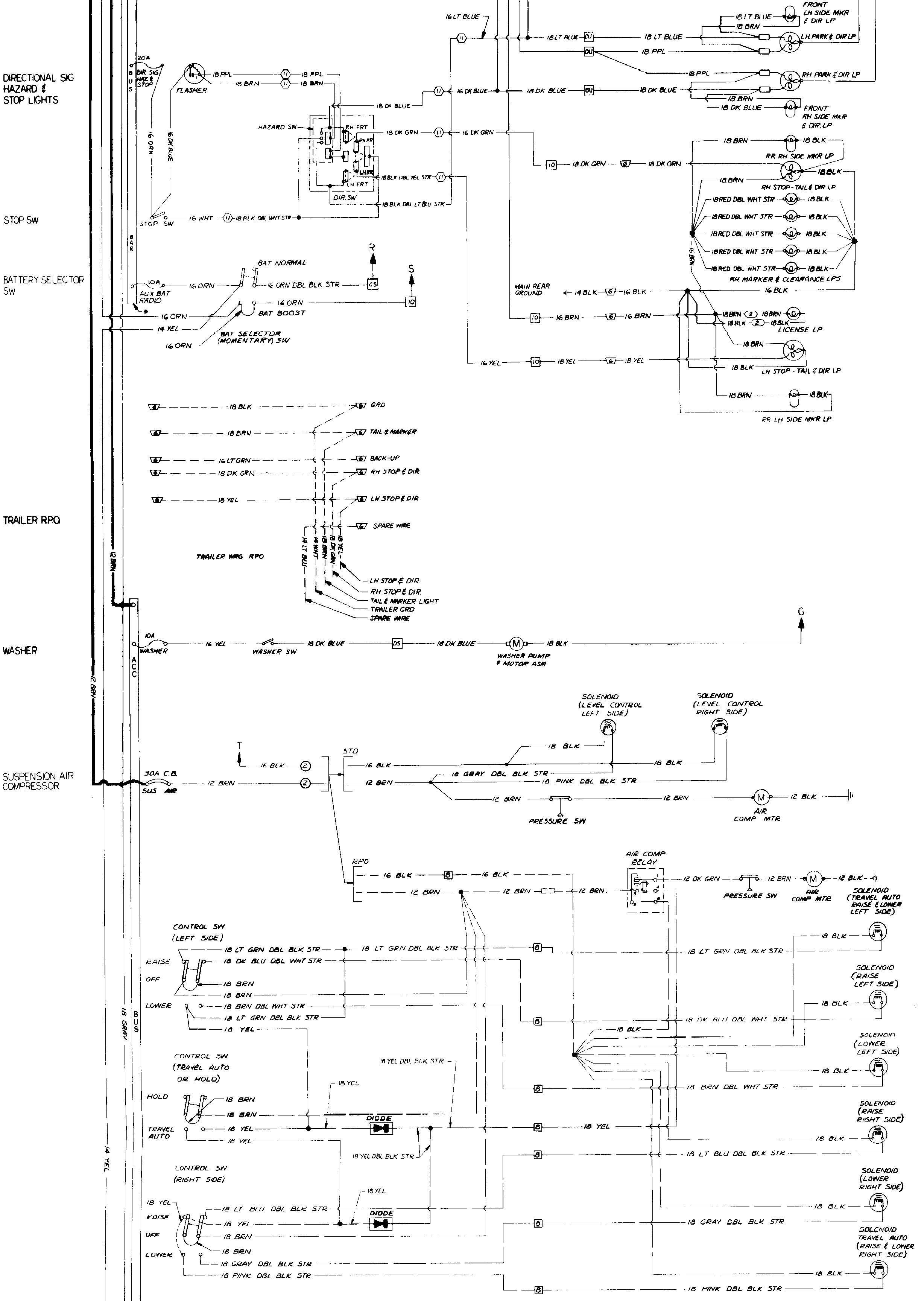
DIRECTIONAL SIG HAZARD & STOP LIGHTS
STOP SW
BATTERY SELECTOR SW
TRAILER RPO
WASHER
SUSPENSION AIR COMPRESSOR
20A DIR SIG HAZ & STOP
FLASHER
HAZARD SW
DIR SW
RH FRT
LH FRT
STOP SW
FRONT LH SIDE MKR & DIR LP
LH PARK & DIR LP
RH PARK & DIR LP
FRONT RH SIDE MKR & DIR LP
RR RH SIDE MKR LP
RH STOP-TAIL & DIR LP
RR MARKER & CLEARANCE LPS
MAIN REAR GROUND
LICENSE LP
LH STOP-TAIL & DIR LP
RR LH SIDE MKR LP
10A AUX BAT RADIO
BAT NORMAL
BAT BOOST
BAT SELECTOR (MOMENTARY) SW
R
S
GRD
TAIL & MARKER
BACK-UP
RH STOP & DIR
LH STOP & DIR
SPARE WIRE
TRAILER WRG RPO
TAIL & MARKER LIGHT
TRAILER GRD
12 BRN
ACC
10A WASHER
WASHER SW
WASHER PUMP & MOTOR ASM
G
SOLENOID (LEVEL CONTROL LEFT SIDE)
SOLENOID (LEVEL CONTROL RIGHT SIDE)
T
STD
30A C.B. SUS AIR
PRESSURE SW
AIR COMP MTR
RPO
AIR COMP RELAY
SOLENOID (TRAVEL AUTO RAISE & LOWER LEFT SIDE)
CONTROL SW (LEFT SIDE)
RAISE
OFF
LOWER
SOLENOID (RAISE LEFT SIDE)
SOLENOID (LOWER LEFT SIDE)
CONTROL SW (TRAVEL AUTO OR HOLD)
HOLD
TRAVEL AUTO
DIODE
SOLENOID (RAISE RIGHT SIDE)
CONTROL SW (RIGHT SIDE)
SOLENOID (LOWER RIGHT SIDE)
SOLENOID TRAVEL AUTO (RAISE & LOWER RIGHT SIDE)
18 GRAY
BUS
14 YEL

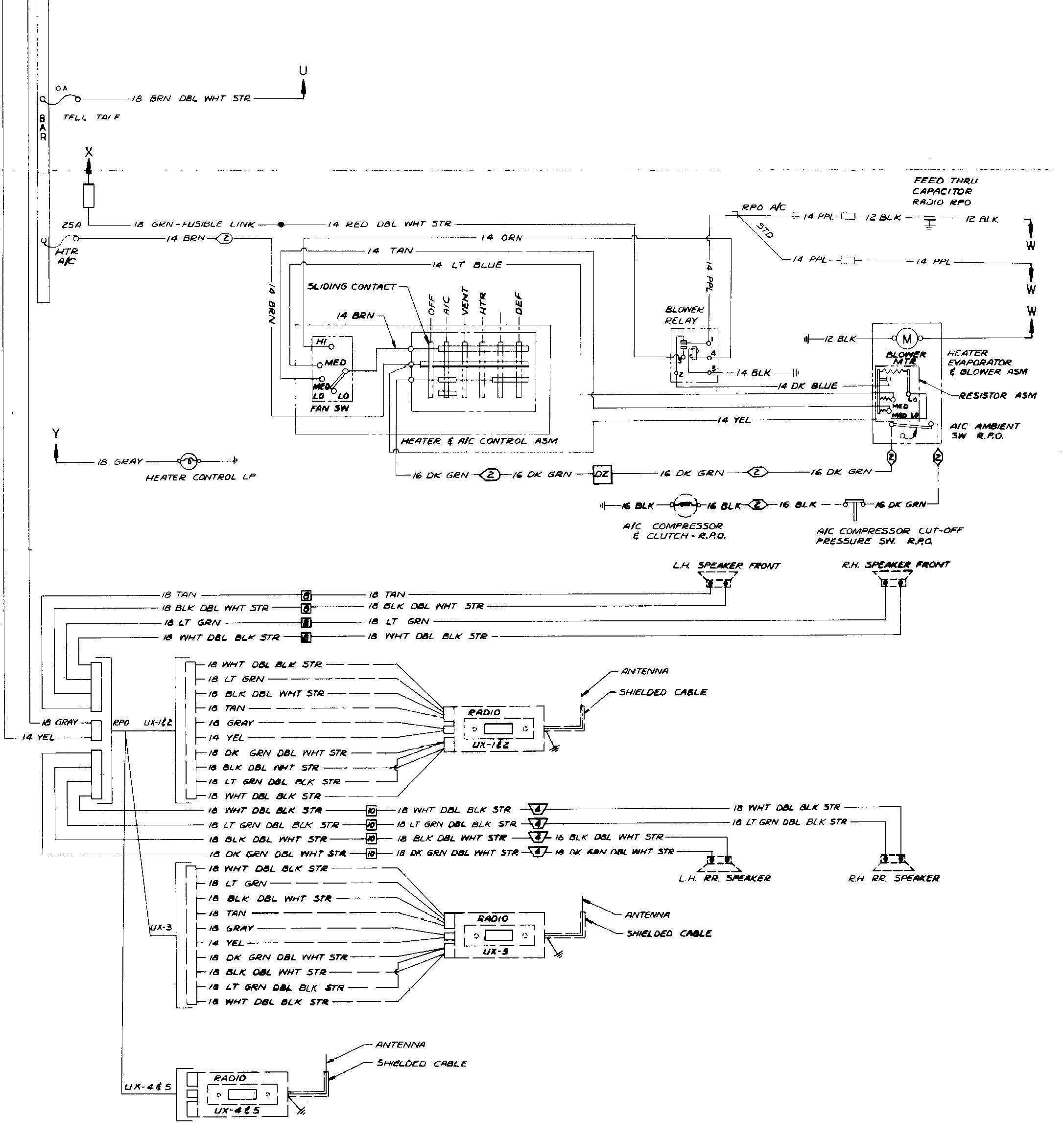
U
10 A
18 BRN DBL WHT STR
TELL TALE
BAR
X
25A
18 GRN - FUSIBLE LINK
14 RED DBL WHT STR
14 BRN
2
HTR A/C
14 ORN
14 TAN
14 LT BLUE
14 BRN
SLIDING CONTACT
OFF
A/C
VENT
HTR
DEF
14 BRN
HI
MED
MED
LO
LO
FAN SW
HEATER & A/C CONTROL ASM
RPO A/C
STD
14 PPL
12 BLK
12 BLK
14 PPL
14 PPL
FEED THRU CAPACITOR RADIO RPO
14 PPL
BLOWER RELAY
1
4
3
5
2
14 BLK
14 DK BLUE
14 YEL
W
W
W
12 BLK
M
BLOWER MTR
HEATER EVAPORATOR & BLOWER ASM
RESISTOR ASM
LO
MED
MED LO
A/C AMBIENT SW R.P.O.
Y
18 GRAY
HEATER CONTROL LP
16 DK GRN
2
16 DK GRN
DZ
16 DK GRN
2
16 DK GRN
16 BLK
16 BLK
2
16 BLK
16 DK GRN
A/C COMPRESSOR & CLUTCH - R.P.O.
A/C COMPRESSOR CUT-OFF PRESSURE SW. R.P.O.
L.H. SPEAKER FRONT
R.H. SPEAKER FRONT
18 TAN
18 TAN
18 BLK DBL WHT STR
18 BLK DBL WHT STR
18 LT GRN
18 LT GRN
18 WHT DBL BLK STR
18 WHT DBL BLK STR
18 GRAY
14 YEL
RPO
UX-1&2
18 WHT DBL BLK STR
18 LT GRN
18 BLK DBL WHT STR
18 TAN
18 GRAY
14 YEL
18 DK GRN DBL WHT STR
18 BLK DBL WHT STR
18 LT GRN DBL BLK STR
18 WHT DBL BLK STR
RADIO
UX-1&2
ANTENNA
SHIELDED CABLE
18 WHT DBL BLK STR
10
18 WHT DBL BLK STR
4
18 WHT DBL BLK STR
18 LT GRN DBL BLK STR
10
18 LT GRN DBL BLK STR
4
18 LT GRN DBL BLK STR
18 BLK DBL WHT STR
10
18 BLK DBL WHT STR
4
16 BLK DBL WHT STR
18 DK GRN DBL WHT STR
10
18 DK GRN DBL WHT STR
4
18 DK GRN DBL WHT STR
L.H. RR. SPEAKER
R.H. RR. SPEAKER
UX-3
18 WHT DBL BLK STR
18 LT GRN
18 BLK DBL WHT STR
18 TAN
18 GRAY
14 YEL
18 DK GRN DBL WHT STR
18 BLK DBL WHT STR
18 LT GRN DBL BLK STR
18 WHT DBL BLK STR
RADIO
UX-3
ANTENNA
SHIELDED CABLE
UX-4&5
RADIO
UX-4&5
ANTENNA
SHIELDED CABLE

HEATER

AIR CONDITIONING
R.P.O.

RADIO-R.P.O.
NOTE SEE HEATER
CIRCUIT FOR CAPACITOR

CIRCUIT
IDENTIFICATION

LEGEND

SYMBOL	JUNCTION	FUNCTION	LOCATION
AS THRU DZ	LETTERED TERM. WIRE CAVITY & WIRE END OF 28 WAY CONN (PART OF INSTR PANEL HARN ASM)	INSTR PANEL HARN TO ENGINE HARN & FWD LP WRG HARN	ENGINE COMPARTMENT-DASH PANEL UPPER R.H. SIDE
③	3 WAY MULTIPLE CONNECTOR	INSTR PANEL HARN TO POWER LEVELER WARNING	UPPER INSTR PANEL AT GAGE CLUSTER
②	2 WAY MULTIPLE CONNECTOR	REAR BODY HARN TO LICENSE LP	REAR LICENSE PLATE AREA
⑪	11 WAY MULTIPLE CONNECTOR	INSTR. PANEL HARN TO DIR SW HARN	UNDER INSTR PANEL ON STEERING COLUMN
2	2 WAY MULTIPLE CONNECTOR	SIDE BODY HARN TO FUEL TANK SENDER	LH FRAME RAIL FRONT OF MAIN FUEL TANK
3	3 WAY MULTIPLE CONNECTOR	REAR SPEAKERS	REAR OF VEHICLE BOTH CORNERS
4	4 WAY MULTIPLE CONNECTOR	INSTR PANEL HARN TO LOW FUEL INDICATOR	UNDER INSTR PANEL AT TELL TALE
6	6 WAY MULTIPLE CONNECTOR	SIDE BODY HARN TO REAR BODY HARN	LEFT REAR CARLING
2	2 WAY MULTIPLE CONNECTOR	HEATER & AIR CONDITIONING FEED	UNDER INSTR PANEL AT HEATER CONTROLS
10	10 WAY MULTIPLE CONNECTOR	INSTR PANEL HARN TO SIDE BODY HARN	UNDER INSTR PANEL UPPER L.H. SIDE OF DASH PANEL

○	TERMINAL OR CONNECTOR TERMINATION	RELATED CIRCUITS	
•	SPLICE		
●	SPLICE	FRONT ROOF HARN GROUND CIRCUIT	FRONT ROOF NEAR DOME LIGHTS & SPEAKERS
∿	FUSE	FUSE BLOCK-PART OF INSTR PANEL HARN	BEHIND GLOVE BOX COMPARTMENT
30A ⌒	CIRCUIT BREAKER		
— — — —	BROKEN LINES & SPECIFIED R.P.O. DENOTE WRG & PARTS OTHER THAN STD & NOT IN STD WRG HARN ASM'S		
*	BUS BAR PART OF FUSE BLOCK	FUSE BLOCK-PART OF INSTR PANEL HARN	
△6	6 WAY MULTIPLE CONNECTOR	CRUISE CONTROL	UNDER INSTR PANEL AT STEERING COLUMN
③	3 WAY MULTIPLE CONNECTOR	CRUISE CONTROL	UNDER INSTR PANEL AT STEERING COLUMN
▣	JUNCTION BLOCK (FUSIBLE LINK)	RELATED CIRCUITS	ENGINE COMPARTMENT-DASH PANEL UPPER R.H. SIDE
▭	SINGLE LINE CONNECTOR	RELATED CIRCUITS	
[8]	8 WAY MULTIPLE CONNECTOR	INSTR PANEL HARN TO FRONT ROOF HARN	UNDER INSTR PANEL UPPER L.H. SIDE
60A ⌒	LINE CIRCUIT BREAKER	CIRCUIT PROTECTOR FOR LIVING AREA BATTERY	MOTOR GENERATOR COMPARTMENT
◇2	2 WAY MULTIPLE CONNECTOR	AMBIENT SWITCH FOR AIR CONDITIONING	PART OF HEATER & AIR CONDITIONING UNIT
②	2 WAY MULTIPLE CONNECTOR	INSTR PANEL HARN TO LEVEL CONTROL HARN	UNDER INSTR PANEL AT STEERING COLUMN

1976 GMC MOTORHOME (WITH ELECTRO-LEVEL SUSPENSION SYSTEM)

(MODELS ZEO6581, ZEO6582) DECEMBER 1976