BODY GROUND

ENGINE GROUND

BATTERY

BATTERY AUXILIARY

COMPARTMENT AREA PICKUP JCT

STARTER

ENGINE COMPARTMENT LP RPO

BAT. PICKUP JCT

FUSIBLE LINK

HORNS

GEN. OUTPUT DIODES

IGN KEY WARNING BUZZER

GENERATOR

BACK-UP LPS

NEUT START BACK-UP & SAFETY SW.

SOLENOID-ENGINE THROTTLE STOP RPO

IGNITION SW

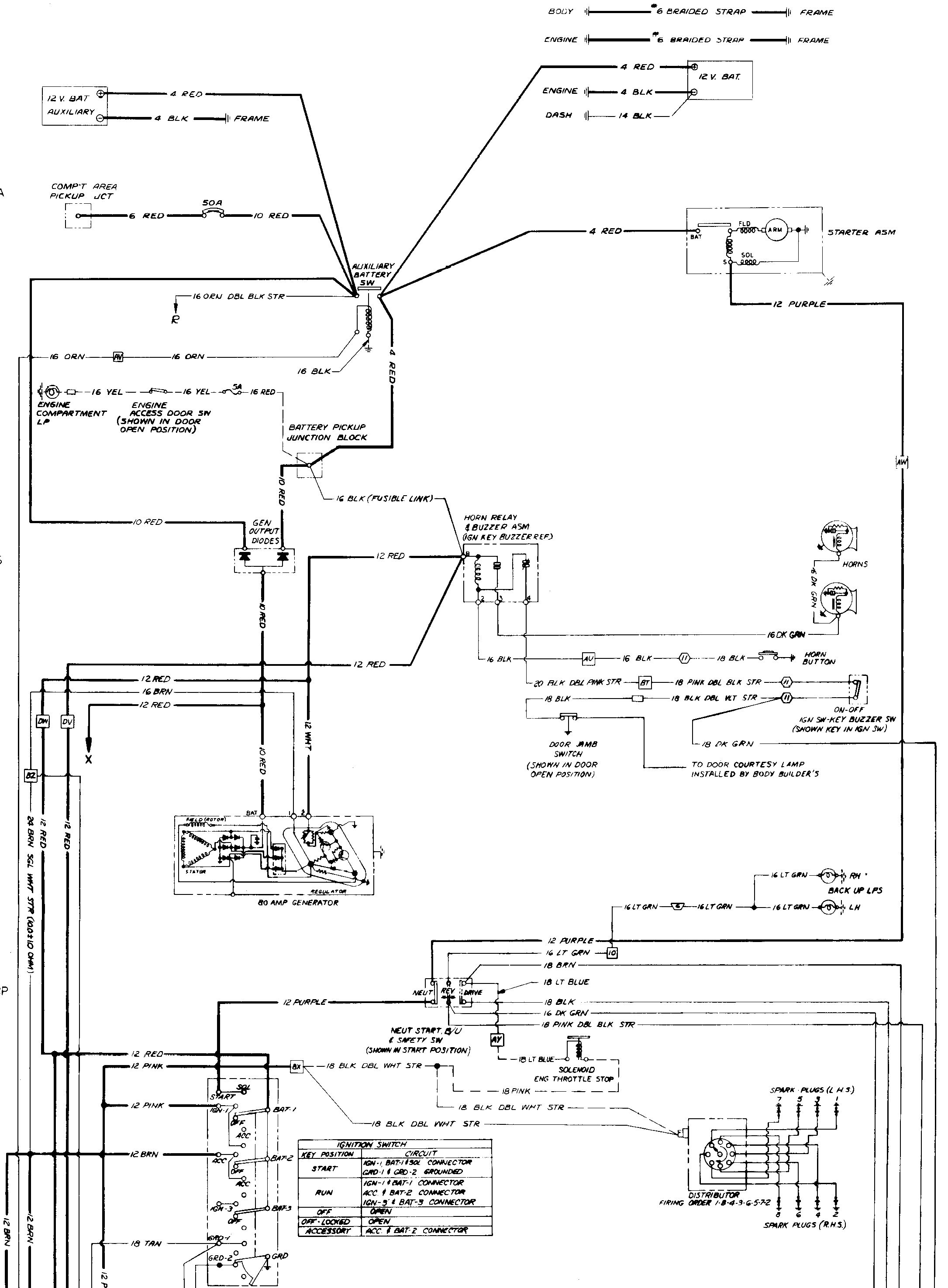
BODY — #6 BRAIDED STRAP — FRAME
ENGINE — #6 BRAIDED STRAP — FRAME
4 RED
12 V. BAT.
ENGINE — 4 BLK
DASH — 14 BLK
12 V. BAT AUXILIARY
4 RED
4 BLK — FRAME
COMP'T AREA PICKUP JCT
6 RED
50A
10 RED
4 RED
STARTER ASM
BAT
FLD
ARM
SOL
S
AUXILIARY BATTERY SW
16 ORN DBL BLK STR
R
16 ORN
AV
16 ORN
16 BLK
4 RED
12 PURPLE
16 YEL
16 YEL
5A
16 RED
ENGINE COMPARTMENT LP
ENGINE ACCESS DOOR SW (SHOWN IN DOOR OPEN POSITION)
BATTERY PICKUP JUNCTION BLOCK
10 RED
16 BLK (FUSIBLE LINK)
AW
10 RED
GEN OUTPUT DIODES
12 RED
HORN RELAY & BUZZER ASM (IGN KEY BUZZER REF)
B
2
3
4
HORNS
16 DK GRN
16 DK GRN
10 RED
12 RED
16 BLK
AU
16 BLK
11
18 BLK
HORN BUTTON
12 RED
16 BRN
12 RED
20 BLK DBL PINK STR
BT
18 PINK DBL BLK STR
11
18 BLK
18 BLK DBL VLT STR
11
ON-OFF
IGN SW-KEY BUZZER SW (SHOWN KEY IN IGN SW)
DW
DV
X
12 WHT
10 RED
DOOR JAMB SWITCH (SHOWN IN DOOR OPEN POSITION)
18 DK GRN
TO DOOR COURTESY LAMP INSTALLED BY BODY BUILDER'S
BZ
24 BRN SGL WHT STR (400±10 OHM)
12 RED
12 RED
BAT
1
2
FIELD (ROTOR)
STATOR
REGULATOR
80 AMP GENERATOR
16 LT GRN
RH
BACK UP LPS
16 LT GRN
67
16 LT GRN
16 LT GRN
LH
12 PURPLE
16 LT GRN
10
18 BRN
18 LT BLUE
NEUT
REV
DRIVE
12 PURPLE
18 BLK
16 DK GRN
18 PINK DBL BLK STR
NEUT START B/U & SAFETY SW (SHOWN IN START POSITION)
AY
18 LT BLUE
SOLENOID ENG THROTTLE STOP
12 RED
12 PINK
BX
18 BLK DBL WHT STR
18 PINK
18 BLK DBL WHT STR
18 BLK DBL WHT STR
SPARK PLUGS (L H S.)
7
5
3
1
DISTRIBUTOR FIRING ORDER 1-8-4-3-6-5-7-2
8
6
4
2
SPARK PLUGS (R.H.S.)
START
SOL
12 PINK
IGN-1
BAT-1
OFF
ACC
12 BRN
ACC
BAT-2
OFF
ACC
IGN-3
BAT-3
OFF
18 TAN
GRD-1
GRD-2
GRD
12 BRN
12 BRN
12 P

IGNITION SWITCH	
KEY POSITION	CIRCUIT
START	IGN-1, BAT-1 & SOL CONNECTOR GRD-1 & GRD-2 GROUNDED
RUN	IGN-1 & BAT-1 CONNECTOR ACC. & BAT-2 CONNECTOR IGN-3 & BAT-3 CONNECTOR
OFF	OPEN
OFF-LOCKED	OPEN
ACCESSORY	ACC. & BAT-2 CONNECTOR

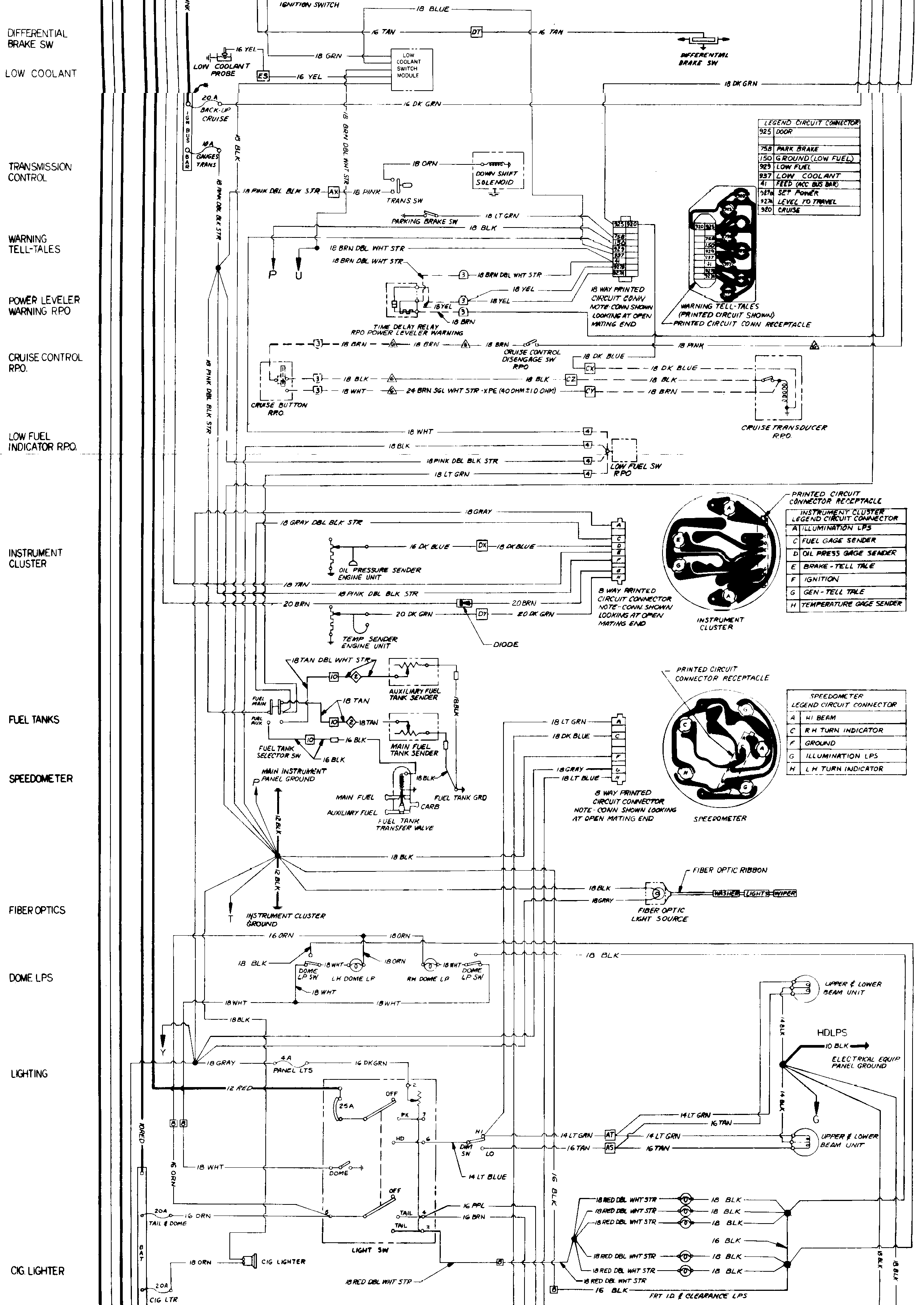
DIFFERENTIAL BRAKE SW
LOW COOLANT
TRANSMISSION CONTROL
WARNING TELL-TALES
POWER LEVELER WARNING RPO
CRUISE CONTROL RPO.
LOW FUEL INDICATOR RPO.
INSTRUMENT CLUSTER
FUEL TANKS
SPEEDOMETER
FIBER OPTICS
DOME LPS
LIGHTING
CIG. LIGHTER
IGNITION SWITCH
18 BLUE
16 TAN
DT
DIFFERENTIAL BRAKE SW
16 YEL
LOW COOLANT PROBE
18 GRN
LOW COOLANT SWITCH MODULE
ES
18 DK GRN
20 A BACK-UP CRUISE
16 DK GRN
IGN BUS BAR
10 A GAUGES TRANS
18 BLK
18 BRN DBL WHT STR
18 ORN
DOWN SHIFT SOLENOID
18 PINK DBL BLK STR
AX
18 PINK
TRANS SW
18 LT GRN
PARKING BRAKE SW
P
U
18 BRN DBL WHT STR
3
18 YEL
TIME DELAY RELAY RPO POWER LEVELER WARNING
18 BRN
18 WAY PRINTED CIRCUIT CONN NOTE: CONN SHOWN LOOKING AT OPEN MATING END
WARNING TELL-TALES (PRINTED CIRCUIT SHOWN)
PRINTED CIRCUIT CONN RECEPTACLE
CRUISE CONTROL DISENGAGE SW RPO
18 PINK
18 DK BLUE
CX
CZ
CY
18 WHT
24 BRN SGL WHT STR · XPE (40 OHM ± 10 OHM)
CRUISE BUTTON RPO.
CRUISE TRANSDUCER RPO.
4
LOW FUEL SW RPO
18 GRAY
18 GRAY DBL BLK STR
16 DK BLUE
DX
OIL PRESSURE SENDER ENGINE UNIT
18 TAN
20 BRN
20 DK GRN
DY
TEMP SENDER ENGINE UNIT
DIODE
8 WAY PRINTED CIRCUIT CONNECTOR NOTE: CONN. SHOWN LOOKING AT OPEN MATING END
PRINTED CIRCUIT CONNECTOR RECEPTACLE
INSTRUMENT CLUSTER
18 TAN DBL WHT STR
10
AUXILIARY FUEL TANK SENDER
FUEL MAIN
FUEL AUX
FUEL TANK SELECTOR SW
16 BLK
MAIN FUEL TANK SENDER
MAIN INSTRUMENT PANEL GROUND
MAIN FUEL
AUXILIARY FUEL
CARB
FUEL TANK TRANSFER VALVE
FUEL TANK GRD
12 BLK
18 DK BLUE
18 LT BLUE
8 WAY PRINTED CIRCUIT CONNECTOR NOTE: CONN SHOWN LOOKING AT OPEN MATING END
SPEEDOMETER
INSTRUMENT CLUSTER GROUND
T
FIBER OPTIC RIBBON
FIBER OPTIC LIGHT SOURCE
WASHER
LIGHTS
WIPER
16 ORN
18 ORN
DOME LP SW
LH DOME LP
RH DOME LP
Y
4 A PANEL LTS
16 DK GRN
12 RED
10 RED
25 A
OFF
PK
HD
DOME
TAIL
LIGHT SW
HI
LO
DIM SW
14 LT BLUE
14 LT GRN
16 TAN
AT
AS
UPPER & LOWER BEAM UNIT
14 BLK
HDLPS
10 BLK
ELECTRICAL EQUIP PANEL GROUND
G
16 BLK
18 RED DBL WHT STR
16 PPL
16 BRN
8
20 A TAIL & DOME
BAT
18 ORN
CIG LIGHTER
20 A CIG LTR
FRT I.D. & CLEARANCE LPS

LEGEND CIRCUIT CONNECTOR	
925	DOOR
758	PARK BRAKE
150	GROUND (LOW FUEL)
929	LOW FUEL
937	LOW COOLANT
41	FEED (ACC BUS BAR)
927B	SET POWER
927A	LEVEL TO TRAVEL
920	CRUISE

INSTRUMENT CLUSTER LEGEND CIRCUIT CONNECTOR	
A	ILLUMINATION LPS
C	FUEL GAGE SENDER
D	OIL PRESS GAGE SENDER
E	BRAKE - TELL TALE
F	IGNITION
G	GEN - TELL TALE
H	TEMPERATURE GAGE SENDER

SPEEDOMETER LEGEND CIRCUIT CONNECTOR	
A	HI BEAM
C	R H TURN INDICATOR
F	GROUND
G	ILLUMINATION LPS
H	L H TURN INDICATOR

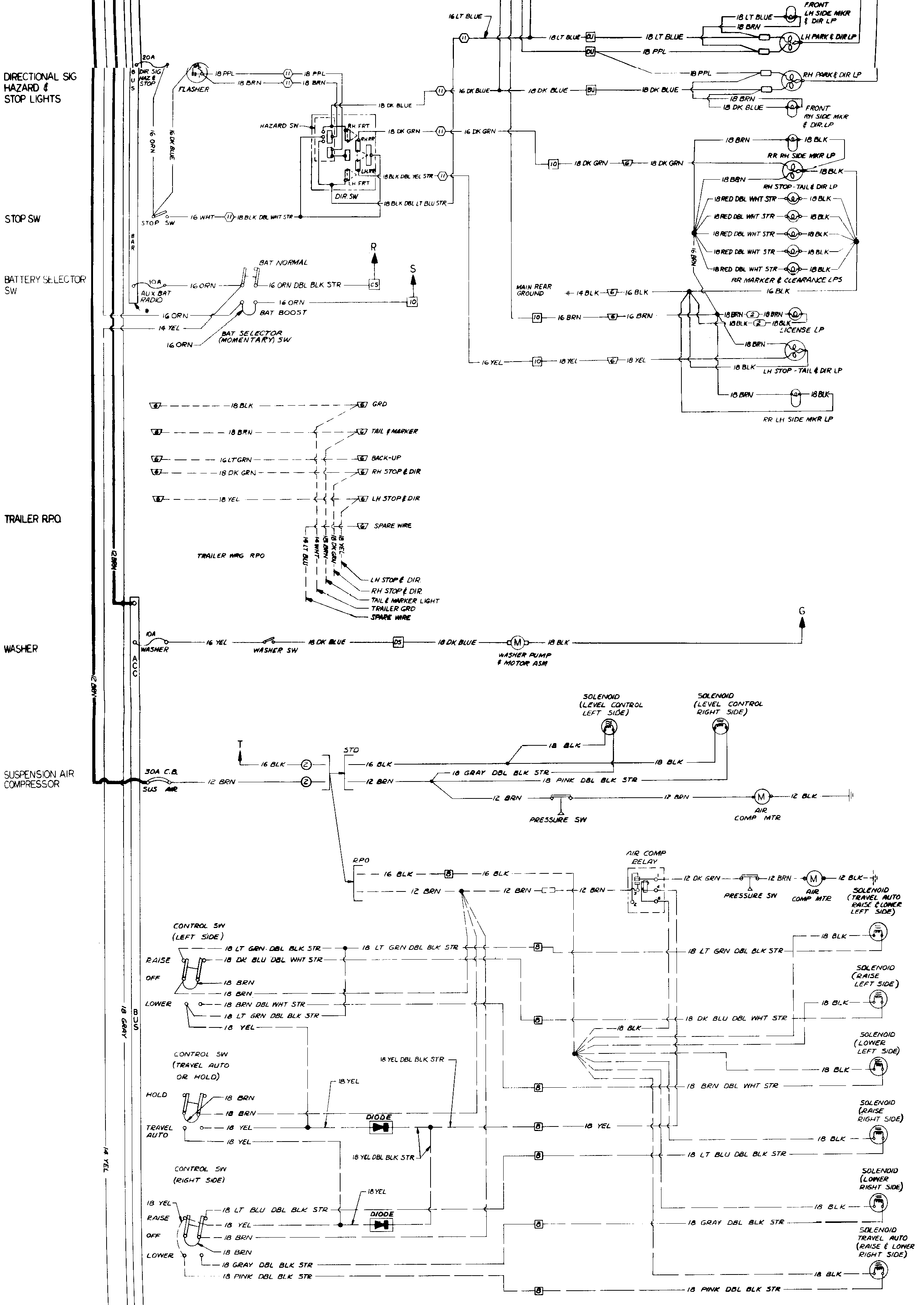
DIRECTIONAL SIG HAZARD & STOP LIGHTS
STOP SW
BATTERY SELECTOR SW
TRAILER RPO
WASHER
SUSPENSION AIR COMPRESSOR
20A DIR SIG HAZ & STOP
B U S
FLASHER
18 PPL
18 BRN
16 ORN
16 DK BLUE
HAZARD SW
RH FRT
RH RR
LH RR
LH FRT
DIR. SW
18 DK BLUE
18 DK GRN
18 BLK DBL YEL STR
18 BLK DBL LT BLU STR
16 LT BLUE
16 DK BLUE
16 DK GRN
18 LT BLUE
18 DK BLUE
FRONT LH SIDE MKR & DIR LP
LH PARK & DIR LP
RH PARK & DIR LP
FRONT RH SIDE MKR & DIR. LP
18 BLK
RR RH SIDE MKR LP
RH STOP-TAIL & DIR LP
18 RED DBL WHT STR
RR MARKER & CLEARANCE LPS
MAIN REAR GROUND
14 BLK
16 BLK
16 BRN
LICENSE LP
16 YEL
18 YEL
LH STOP-TAIL & DIR LP
RR LH SIDE MKR LP
STOP SW
16 WHT
18 BLK DBL WHT STR
BAR
BAT NORMAL
10A
AUX BAT RADIO
16 ORN DBL BLK STR
BAT BOOST
14 YEL
BAT SELECTOR (MOMENTARY) SW
R
S
GRD
TAIL & MARKER
BACK-UP
RH STOP & DIR
LH STOP & DIR
SPARE WIRE
16 LT GRN
TRAILER WRG RPO
14 LT BLU
14 WHT
18 BRN
18 DK GRN
18 YEL
LH STOP & DIR.
RH STOP & DIR.
TAIL & MARKER LIGHT
TRAILER GRD
SPARE WIRE
12 BRN
ACC
10A WASHER
WASHER SW
WASHER PUMP & MOTOR ASM
G
SOLENOID (LEVEL CONTROL LEFT SIDE)
SOLENOID (LEVEL CONTROL RIGHT SIDE)
T
STD
30A C.B. SUS AIR
18 GRAY DBL BLK STR
18 PINK DBL BLK STR
PRESSURE SW
AIR COMP MTR
12 BLK
RPO
AIR COMP RELAY
12 DK GRN
SOLENOID (TRAVEL AUTO RAISE & LOWER LEFT SIDE)
CONTROL SW (LEFT SIDE)
RAISE
OFF
LOWER
18 LT GRN DBL BLK STR
18 DK BLU DBL WHT STR
18 BRN DBL WHT STR
SOLENOID (RAISE LEFT SIDE)
SOLENOID (LOWER LEFT SIDE)
CONTROL SW (TRAVEL AUTO OR HOLD)
HOLD
TRAVEL AUTO
18 YEL DBL BLK STR
DIODE
SOLENOID (RAISE RIGHT SIDE)
18 LT BLU DBL BLK STR
CONTROL SW (RIGHT SIDE)
SOLENOID (LOWER RIGHT SIDE)
SOLENOID TRAVEL AUTO (RAISE & LOWER RIGHT SIDE)
18 GRAY
14 YEL

PART NO. MD-12923 REV A SHEET 1 OF 1

HEATER

AIR CONDITIONING R.P.O.

RADIO-R.P.O.
NOTE SEE HEATER CIRCUIT FOR CAPACITOR

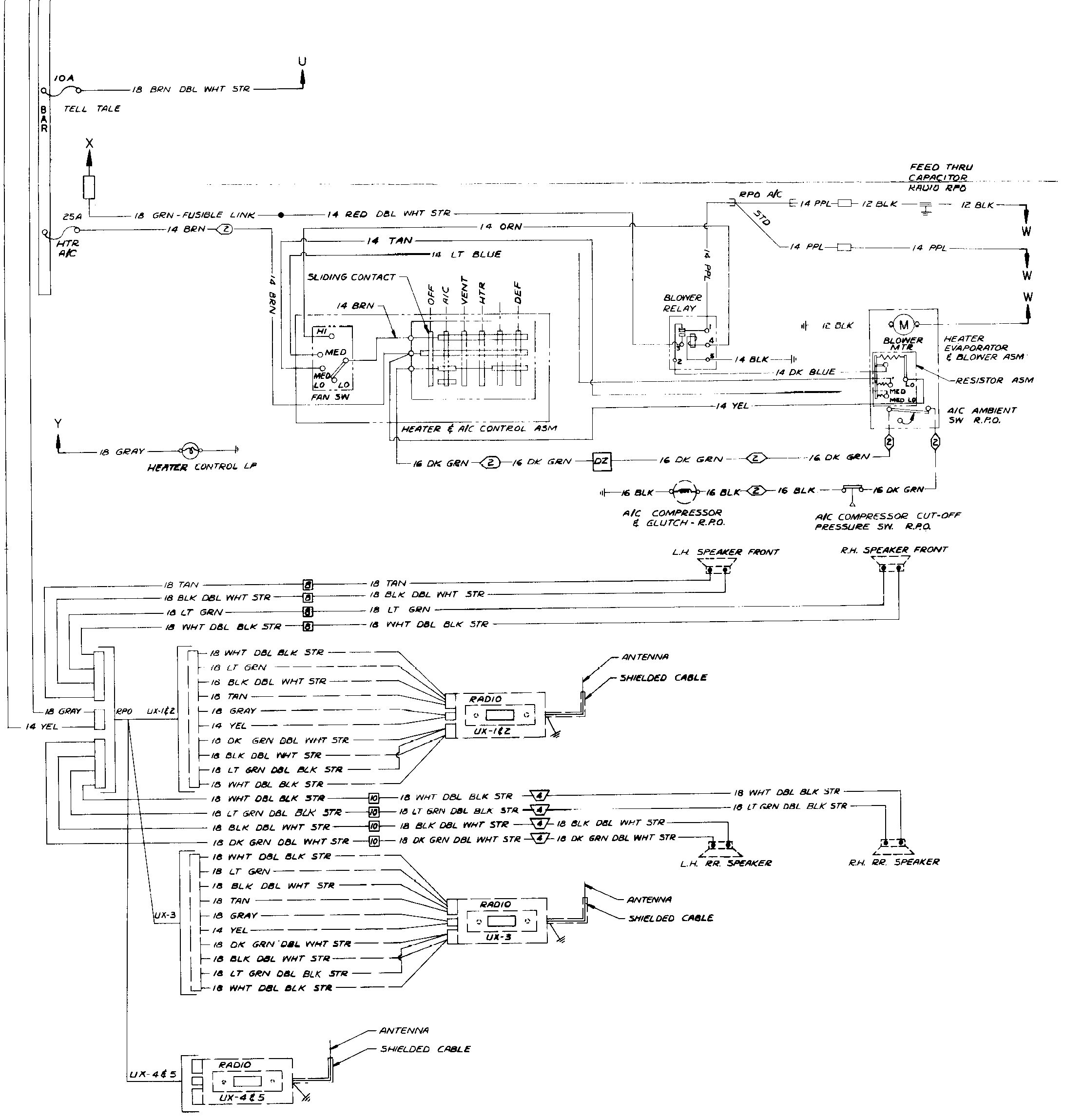
U
10A
18 BRN DBL WHT STR
BAR
TELL TALE
X
25A
18 GRN-FUSIBLE LINK
14 RED DBL WHT STR
14 BRN
HTR A/C
14 ORN
14 TAN
14 LT BLUE
14 BRN
SLIDING CONTACT
OFF
A/C
VENT
HTR
DEF
HI
MED
MED LO
LO
FAN SW
HEATER & A/C CONTROL ASM
Y
18 GRAY
HEATER CONTROL LP
16 DK GRN
DZ
FEED THRU CAPACITOR RADIO RPO
RPO A/C
STD
14 PPL
12 BLK
W
BLOWER RELAY
14 BLK
14 DK BLUE
14 YEL
BLOWER MTR
M
HEATER EVAPORATOR & BLOWER ASM
RESISTOR ASM
A/C AMBIENT SW R.P.O.
16 BLK
A/C COMPRESSOR & GLUTCH-R.P.O.
A/C COMPRESSOR CUT-OFF PRESSURE SW. R.P.O.
L.H. SPEAKER FRONT
R.H. SPEAKER FRONT
18 TAN
18 BLK DBL WHT STR
18 LT GRN
18 WHT DBL BLK STR
ANTENNA
SHIELDED CABLE
RADIO
UX-1&2
18 GRAY
14 YEL
RPO
18 DK GRN DBL WHT STR
18 LT GRN DBL BLK STR
L.H. RR. SPEAKER
R.H. RR. SPEAKER
UX-3
UX-4&5

CIRCUIT IDENTIFICATION

LEGEND

SYMBOL	JUNCTION	FUNCTION	LOCATION
AS THRU DZ	LETTERED TERM. WIRE CAVITY @ WIRE END OF 28 WAY CONN (PART OF INSTR PANEL HARN ASM)	INSTR PANEL HARN TO ENGINE HARN & FWD LP WRG HARN	ENGINE COMPARTMENT-DASH PANEL UPPER R.H. SIDE
③	3 WAY MULTIPLE CONNECTOR	INSTR PANEL HARN TO POWER LEVELER WARNING	UPPER INSTR PANEL AT GAGE CLUSTER
②	2 WAY MULTIPLE CONNECTOR	REAR BODY HARN TO LICENSE LP	REAR LICENSE PLATE AREA
⑪	11 WAY MULTIPLE CONNECTOR	INSTR. PANEL HARN TO DIR SW HARN	UNDER INSTR PANEL ON STEERING COLUMN
②	2 WAY MULTIPLE CONNECTOR	SIDE BODY HARN TO FUEL TANK SENDER	LH FRAME RAIL FRONT OF MAIN FUEL TANK
③	3 WAY MULTIPLE CONNECTOR	REAR SPEAKERS	REAR OF VEHICLE BOTH CORNERS
4	4 WAY MULTIPLE CONNECTOR	INSTR PANEL HARN TO LOW FUEL INDICATOR	UNDER INSTR PANEL AT TELL TALE
6	6 WAY MULTIPLE CONNECTOR	SIDE BODY HARN TO REAR BODY HARN	LEFT REAR CARLING
②	2 WAY MULTIPLE CONNECTOR	HEATER & AIR CONDITIONING FEED	UNDER INSTR PANEL AT HEATER CONTROLS
10	10 WAY MULTIPLE CONNECTOR	INSTR PANEL HARN TO SIDE BODY HARN	UNDER INSTR PANEL UPPER L.H. SIDE OF DASH PANEL
○	TERMINAL OR CONNECTOR TERMINATION	RELATED CIRCUITS	
●	SPLICE		
●	SPLICE	FRONT ROOF HARN GROUND CIRCUIT	FRONT ROOF NEAR DOME LIGHTS & SPEAKERS
∾	FUSE	FUSE BLOCK-PART OF INSTR PANEL HARN	BEHIND GLOVE BOX COMPARTMENT
30A	CIRCUIT BREAKER		
————	BROKEN LINES & SPECIFIED R.P.O. DENOTE WRG & PARTS OTHER THAN STD & NOT IN STD WRG HARN ASM'S		
*	BUS BAR PART OF FUSE BLOCK	FUSE BLOCK-PART OF INSTR PANEL HARN	
6	6 WAY MULTIPLE CONNECTOR	CRUISE CONTROL	UNDER INSTR PANEL AT STEERING COLUMN
3	3 WAY MULTIPLE CONNECTOR	CRUISE CONTROL	UNDER INSTR PANEL AT STEERING COLUMN
▫	JUNCTION BLOCK (FUSIBLE LINK)	RELATED CIRCUITS	ENGINE COMPARTMENT-DASH PANEL UPPER R.H. SIDE
▭	SINGLE LINE CONNECTOR	RELATED CIRCUITS	
8	8 WAY MULTIPLE CONNECTOR	INSTR PANEL HARN TO FRONT ROOF HARN	UNDER INSTR PANEL UPPER L.H. SIDE
50A	LINE CIRCUIT BREAKER	CIRCUIT PROTECTOR FOR LIVING AREA BATTERY	ENGINE COMPARTMENT-DASH PANEL UPPER R.H. SIDE
②	2 WAY MULTIPLE CONNECTOR	AMBIENT SWITCH FOR AIR CONDITIONING	PART OF HEATER/AIR CONDITIONING UNIT
②	2 WAY MULTIPLE CONNECTOR	INSTR PANEL HARN TO LEVEL CONTROL HARN	UNDER INSTR PANEL AT STEERING COLUMN

1976 COMMECIAL TRANSMODE VEHICLE (WITH ELECTRO-LEVEL SUSPENSION SYSTEM)
(MODELS ZEO6083, ZEO6583)

DECEMBER 1976